Project technical update

- WFI design update
  - Cycle4 design configuration just frozen (review 3/28)
  - Building models for next integrated modeling cycle now
  - Cycle5 trade space
- Integrated modeling update
  - Cycle3 new results
    - Jitter update – adding HGAs [preliminary, not included]
    - Early look at (low) jitter from WFI cycle4 cryocooler
  - Cycle3 WFI internal thermoelastic sensitivity analysis
  - Cycle4 now at point where we are building models
    - Will include grism in integrated modeling

Cycle4 WFI design update

- Outline
- WFI design progress
  - Optics performance: distortion, dispersion
  - Mechanical, thermal, electrical progress examples
  - Error budgeting
  - Risk reduction activities
- Cycle5 trade space
- Update on detector development
- *Reminder – details of filter set are pending the telescope temperature vs risk assessment, ongoing*

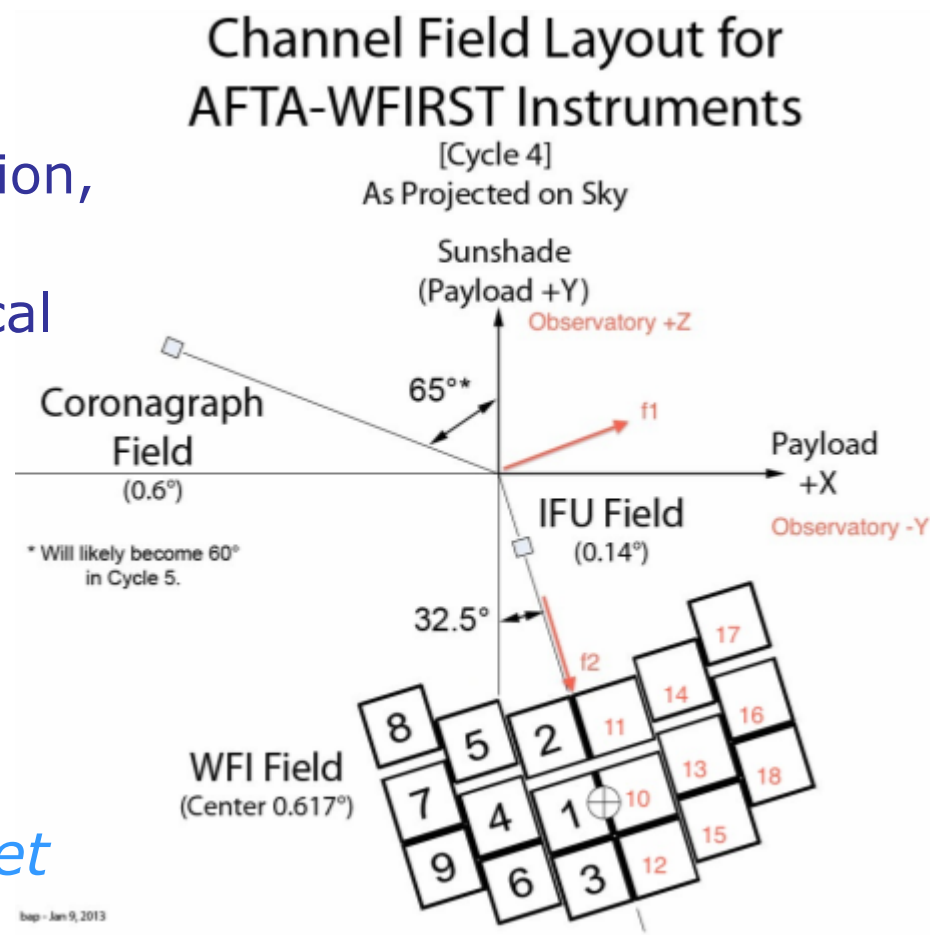

WFI cycle4 overview

- Frozen WFI configuration at 3/28 internal review
  - No major changes from Jan'14 SDT
    - Small repackaging of IFU to avoid element wheel
    - Adjustment of location of some electronics boxes for thermal reasons
    - Element wheel reconfigured, each filter includes pupil mask rather than one fixed mask; allows smaller filters and grism elements with more clearance
- Coronagraph includes feed in instrument carrier (periscope); improves thermal separation of the two instruments and mechanical load paths
  - See details on coronagraph packaging in separate talk

Image quality (nm rms), imaging mode

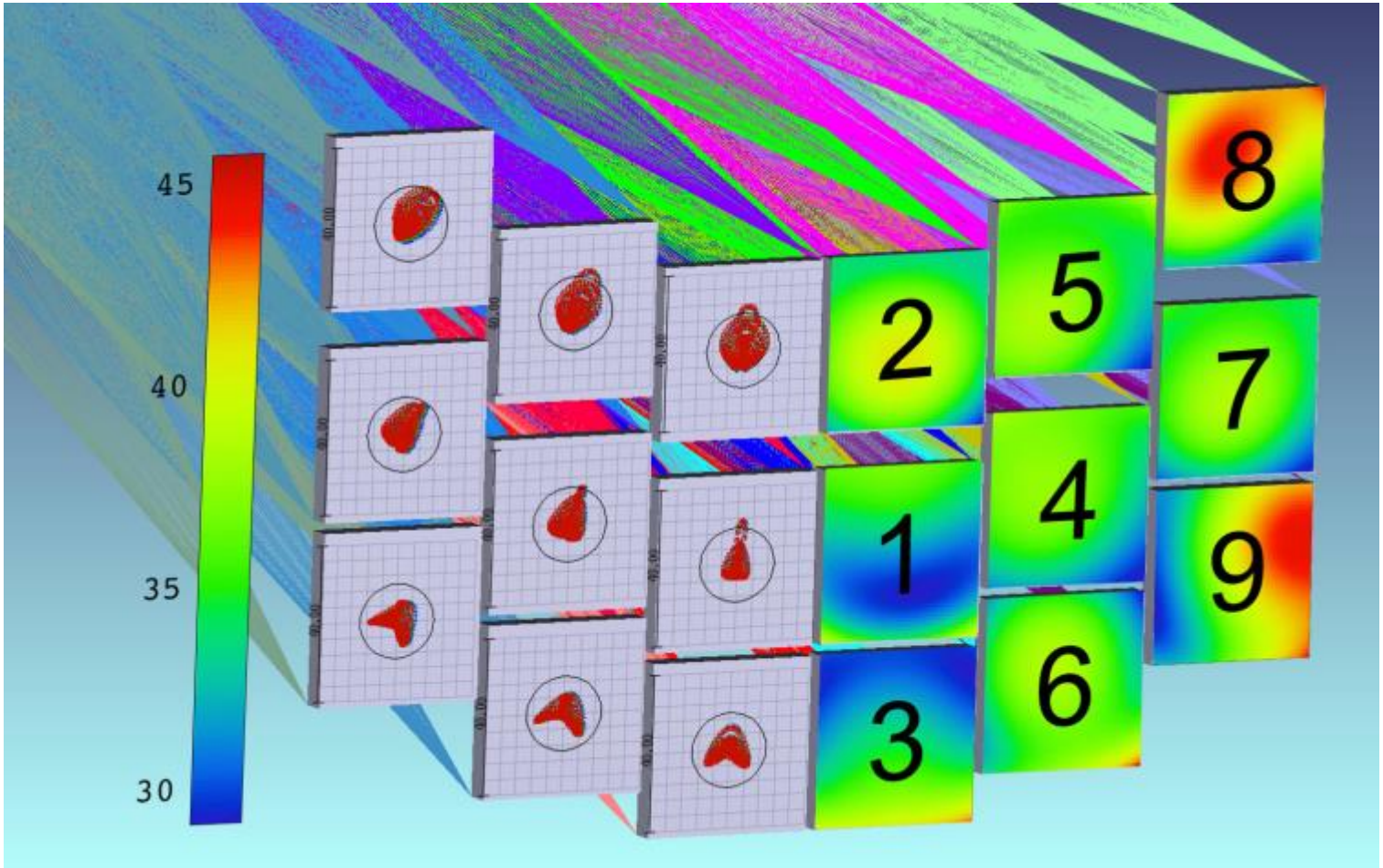

Optical distortion

- Optical distortion assessed
  - 'Feature' of TMA optical designs used off field axis
  - Independent of the small field configuration tweaks under consideration for Cycle5, see below
  - Simple function of radial field angle

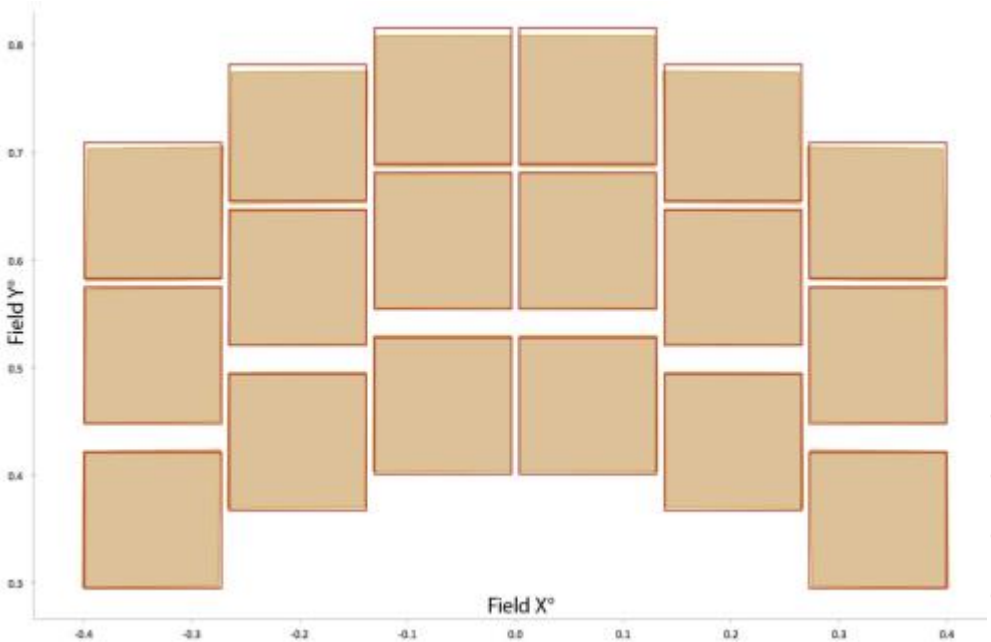

Square outline: zero distortion;
Filled trapezoids: actual SCA field positions

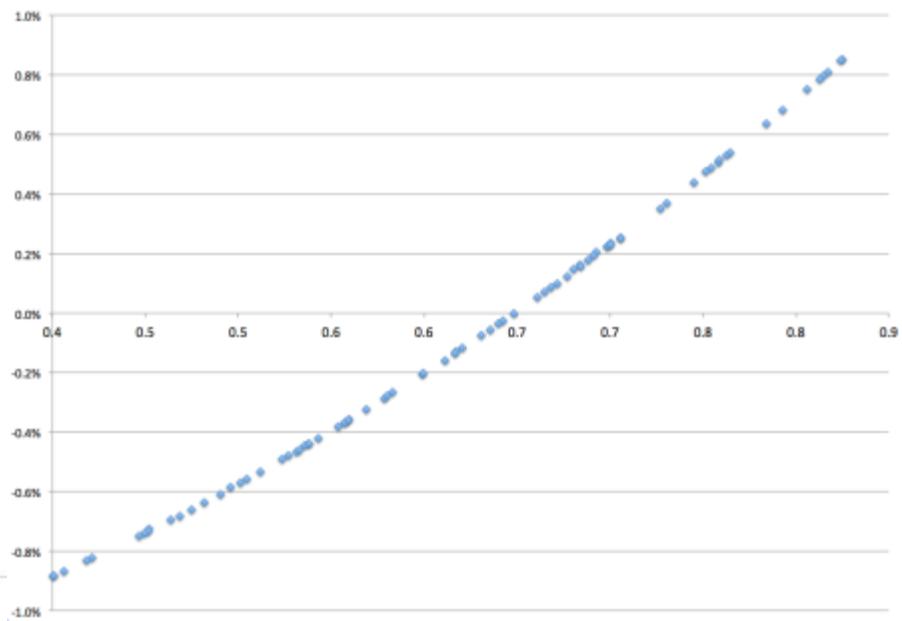

X: field angle, degrees; Y: Distortion, %

WFI Field Distortion Plot – Minimum Deviation

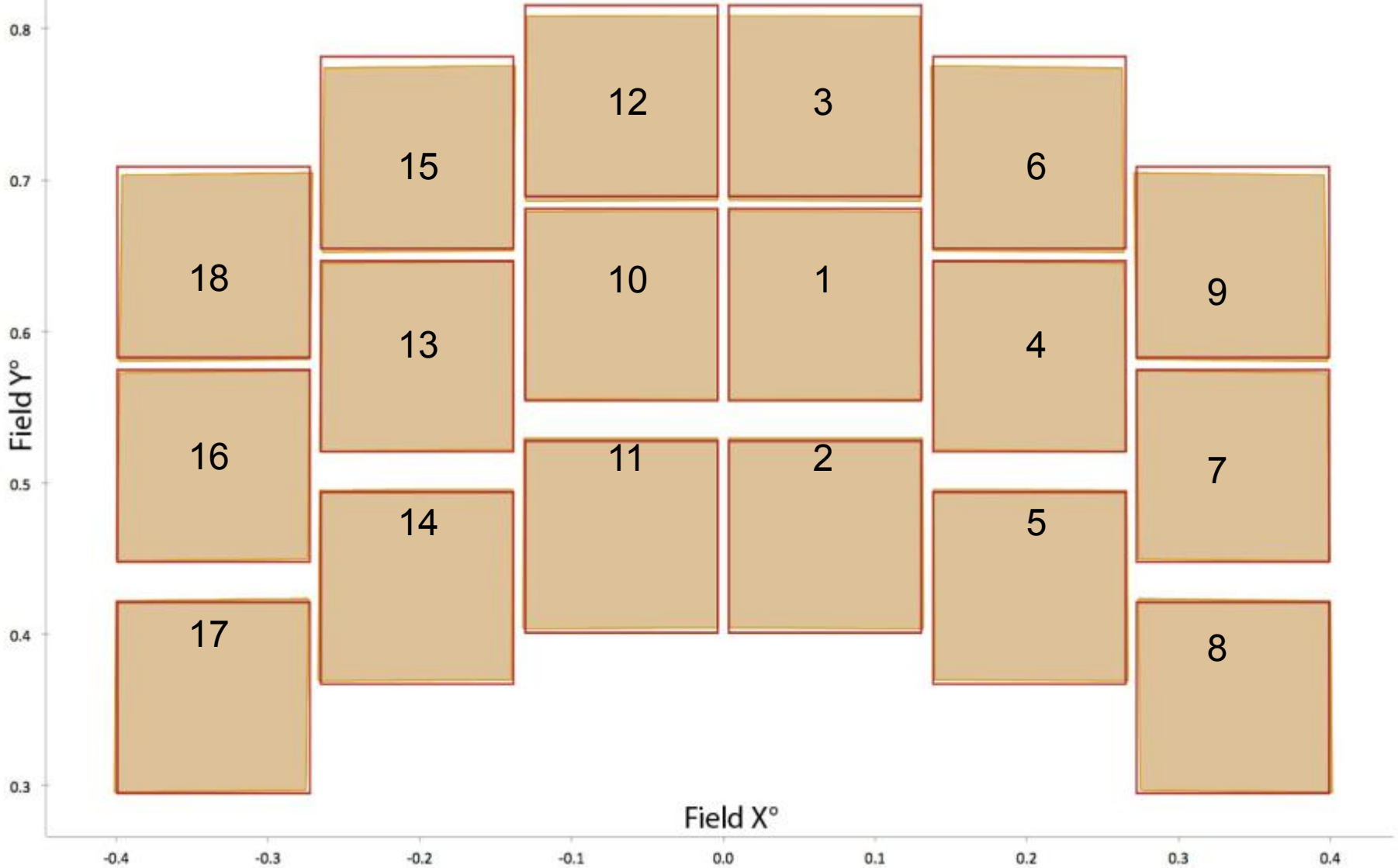

Grism dispersion

- Dispersion does not vary widely with either field or λ However this variation needs to be understood
- Performed rough fit to variation with dispersion
  - F(x-angle,y-angle,λ)

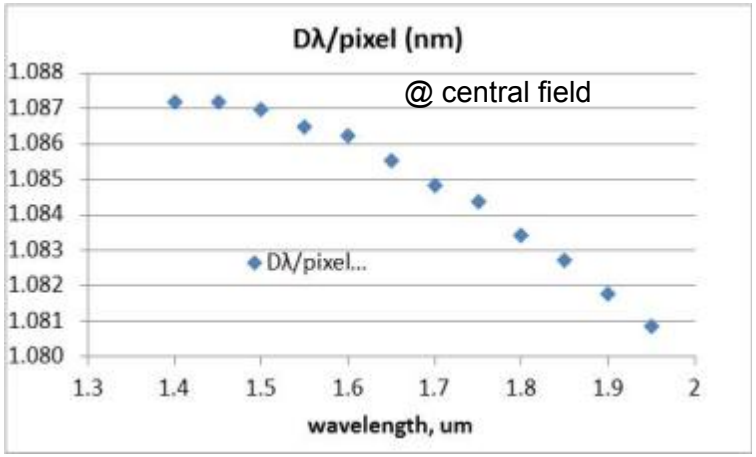

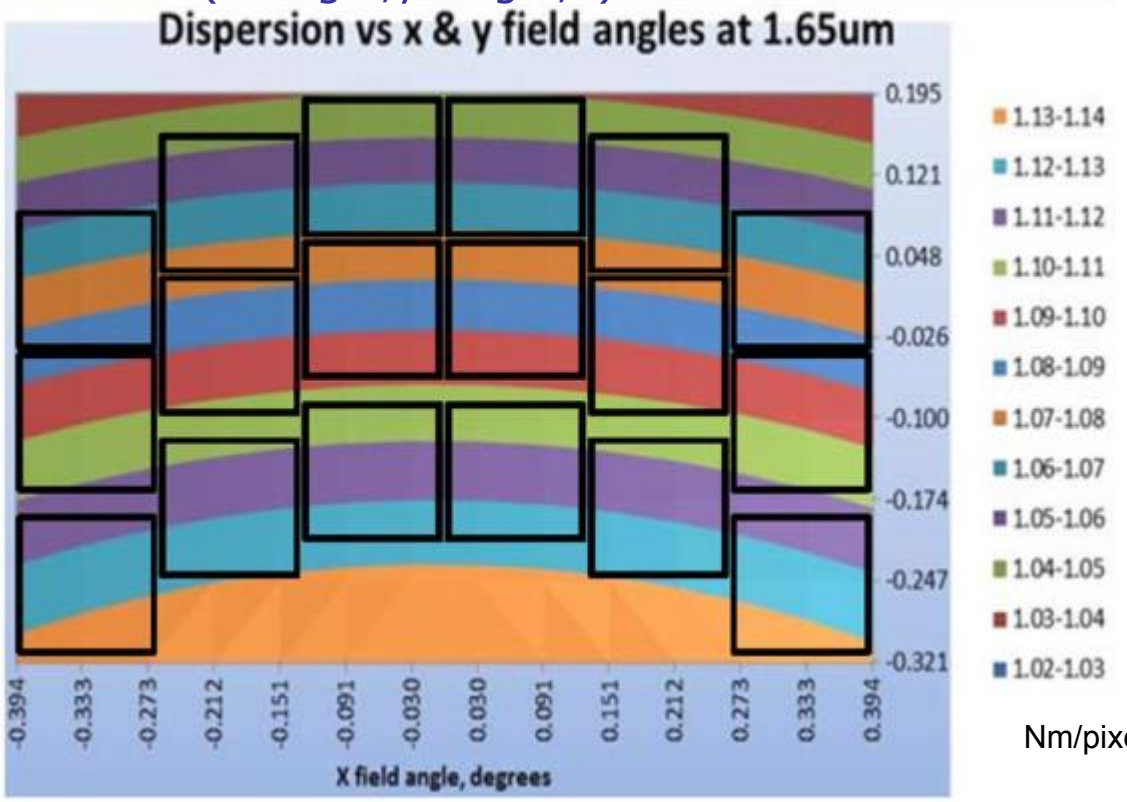

Nm/pixel

Chart above shows spectral variation at central field angle; Chart at left shows dispersion variation across field at central wavelength

WFIRST Observatory Layout

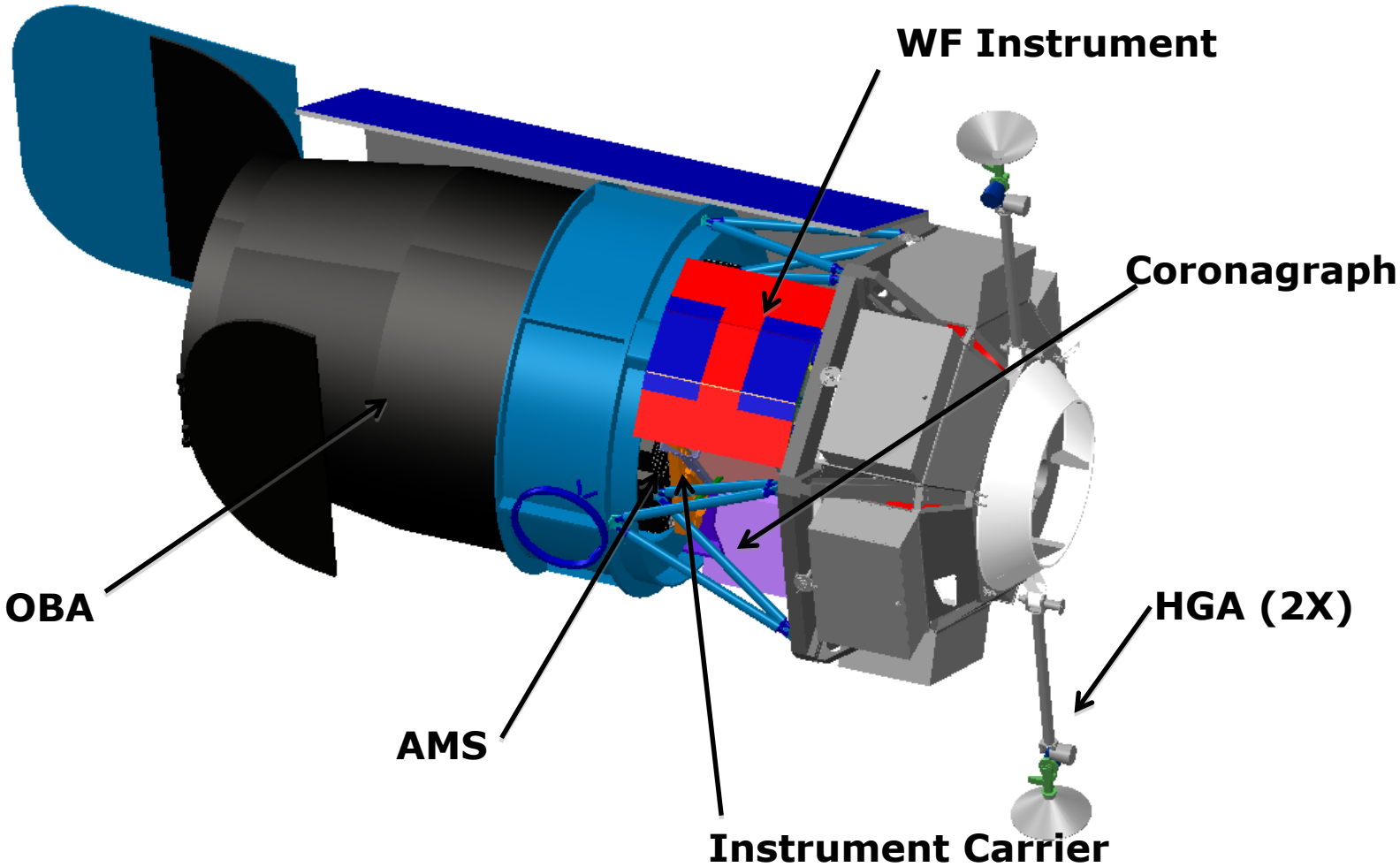

WFIRST IC/WFI/CGI Layout – Cycle 4

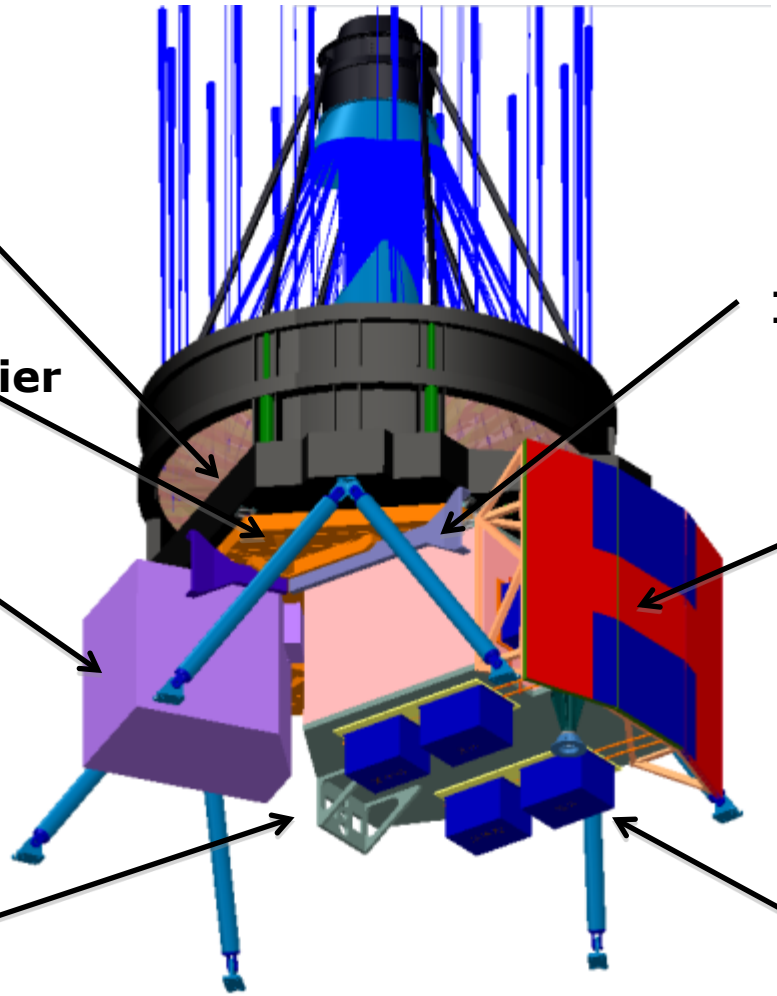

WFIRST WFI Layout – Cycle 4

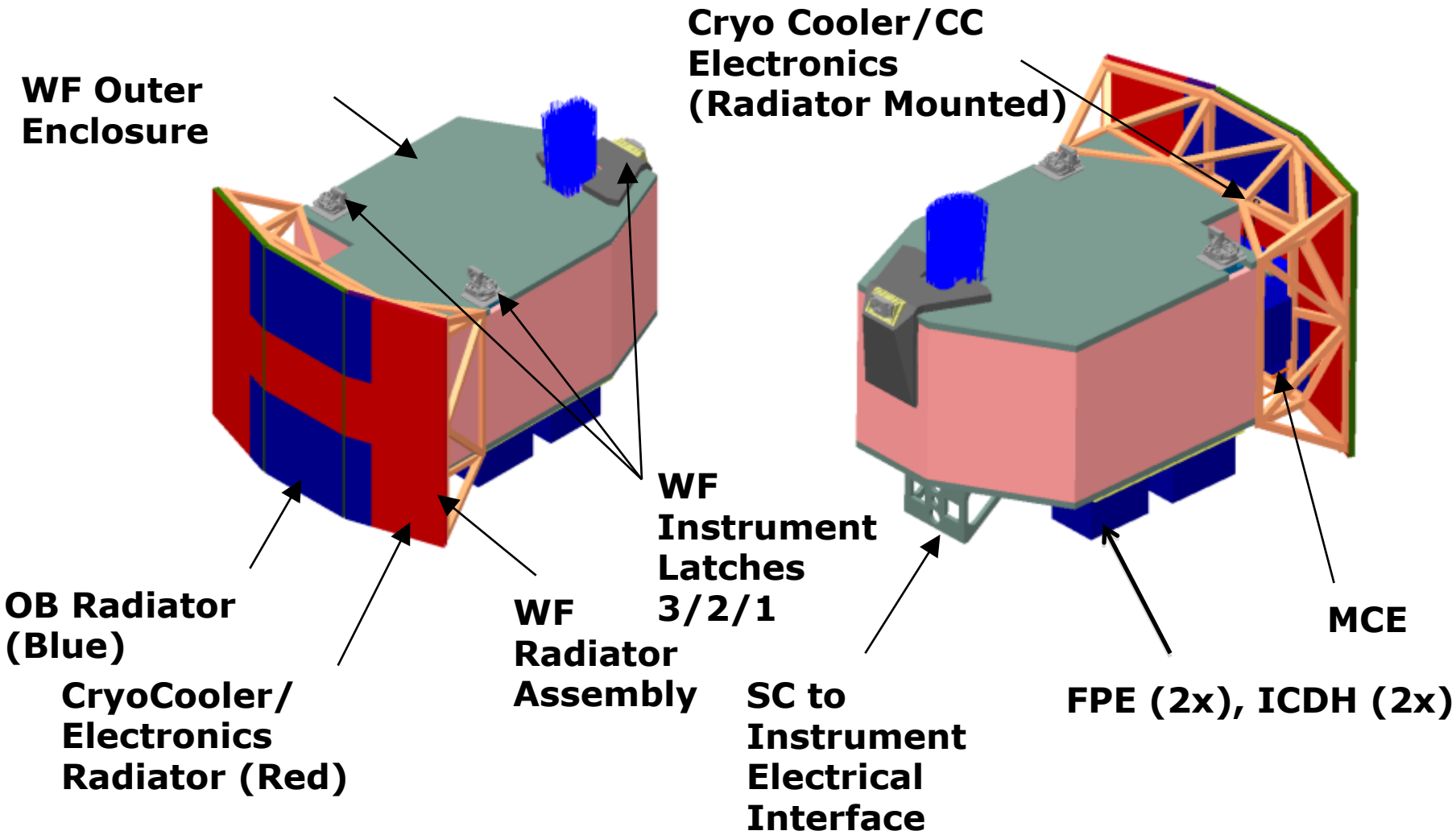

WFIRST WFI Layout – Cycle 4

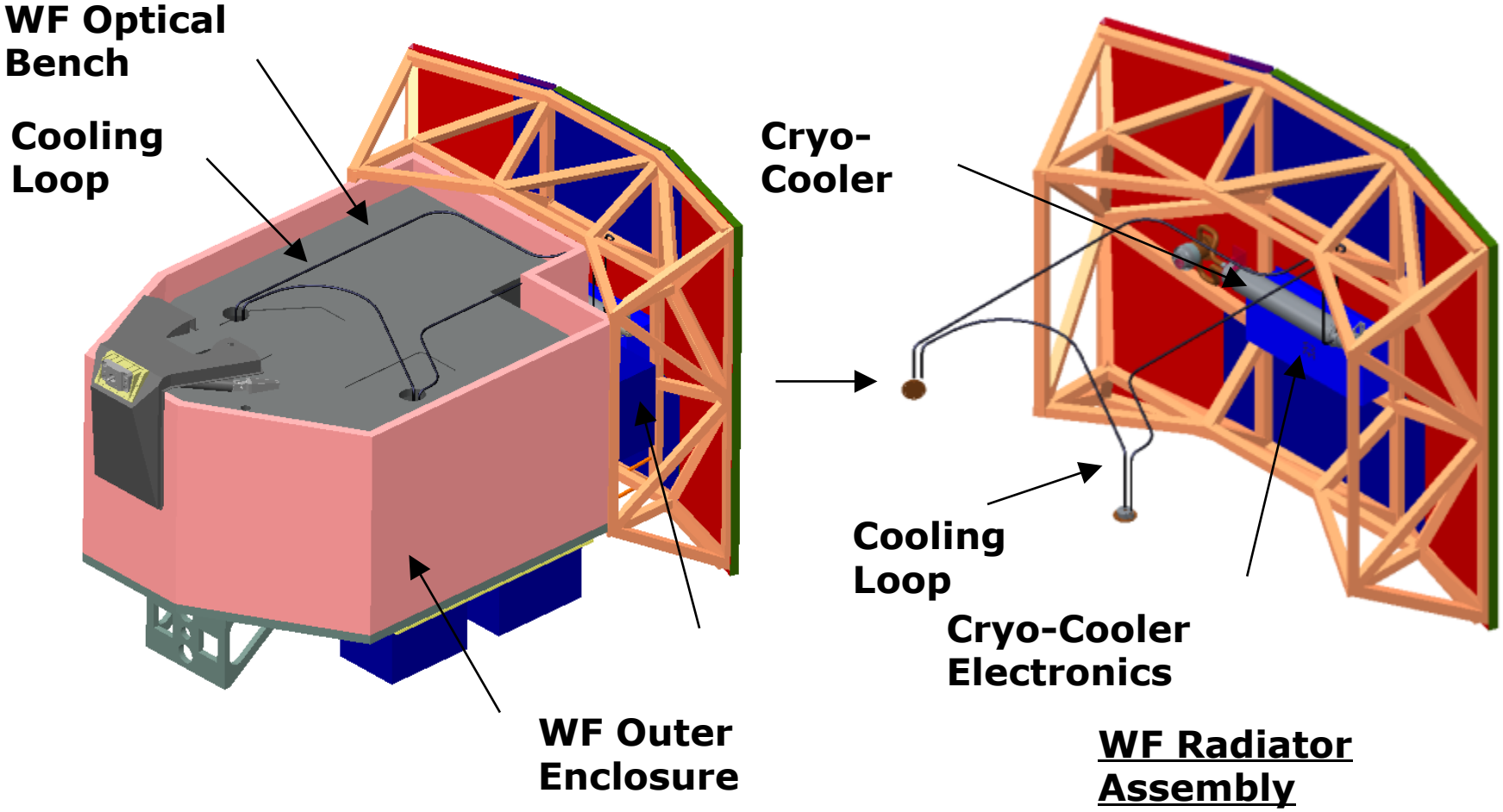

WFIRST WFI Layout – Cycle 4

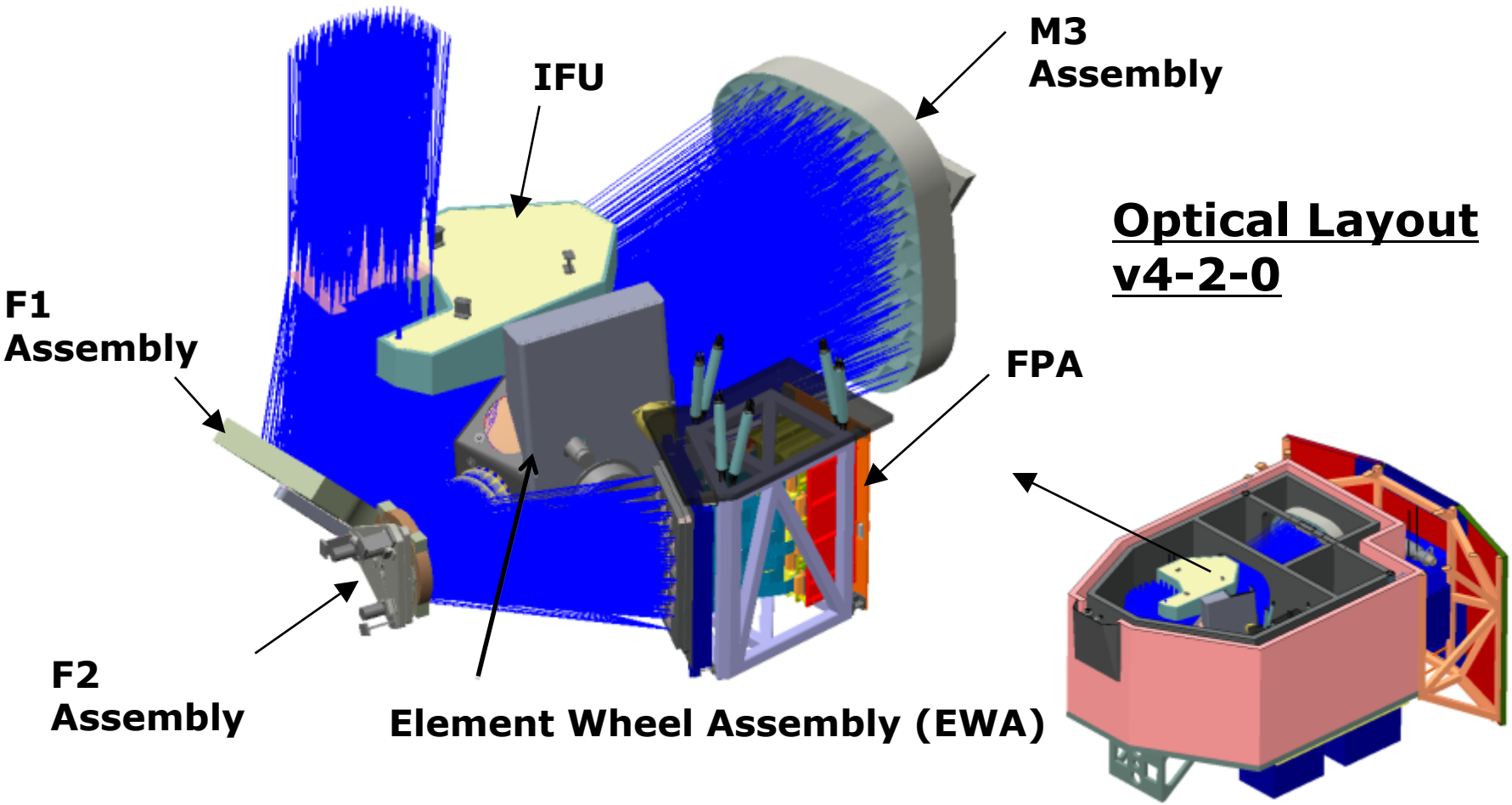

FPA Location and Detail – Cycle 4

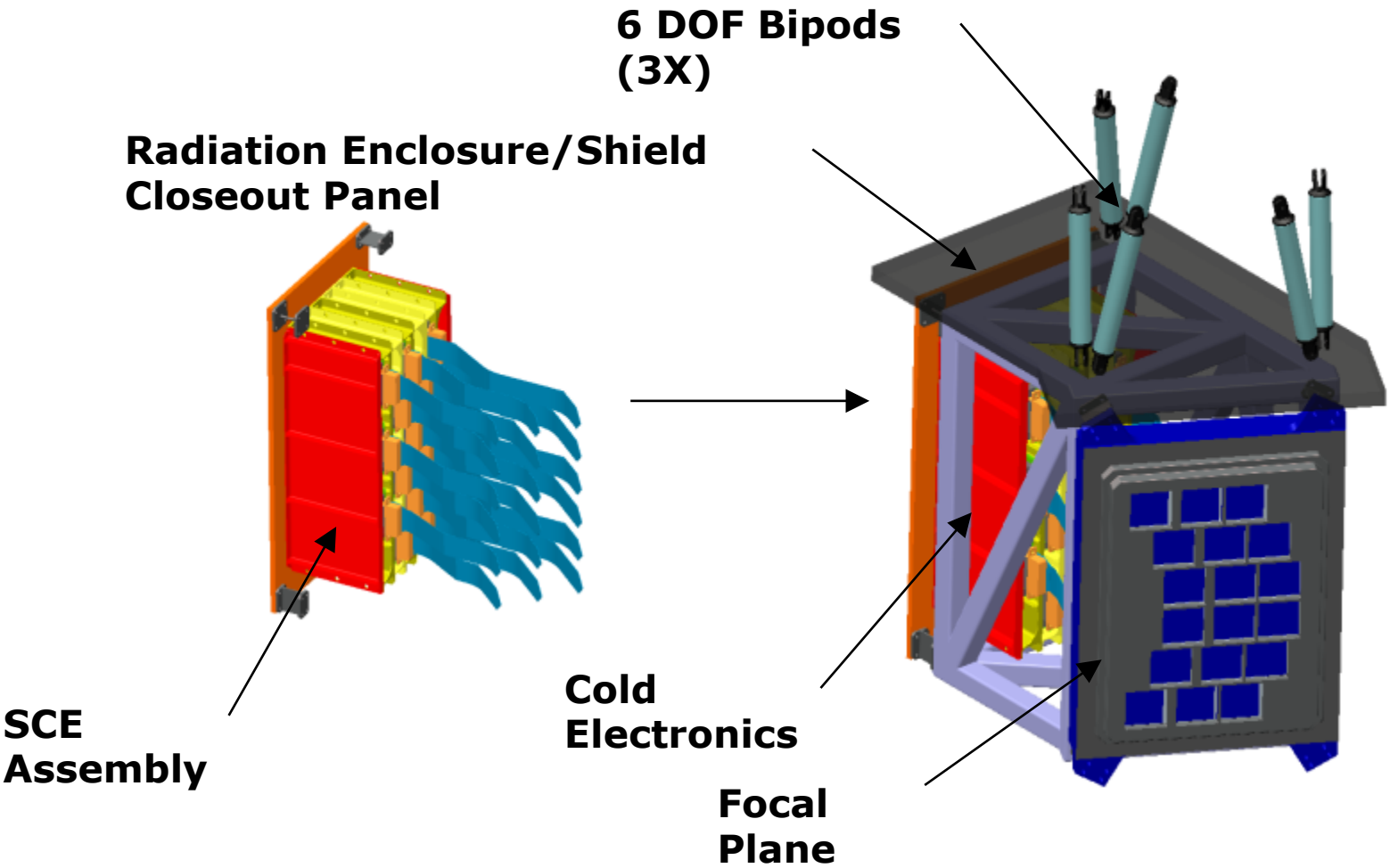

Heat Straps (TBD)
(Motor and Mask)

Filter Wheel

Motor design and bearings-

Position Sensor

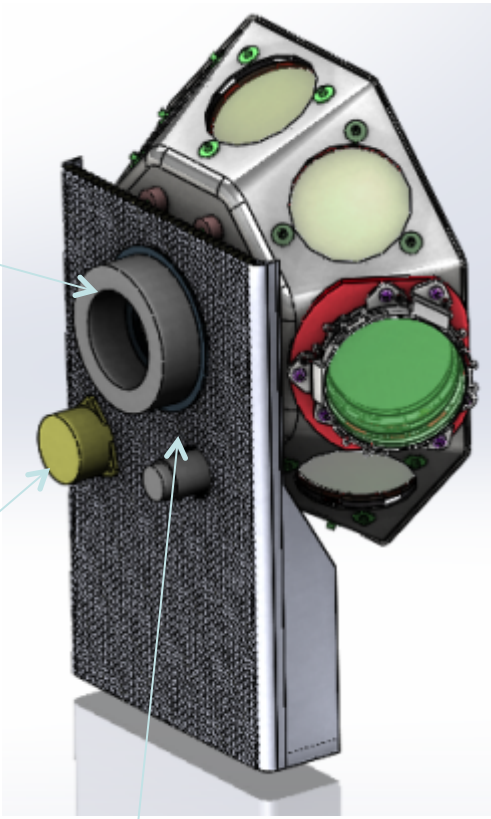

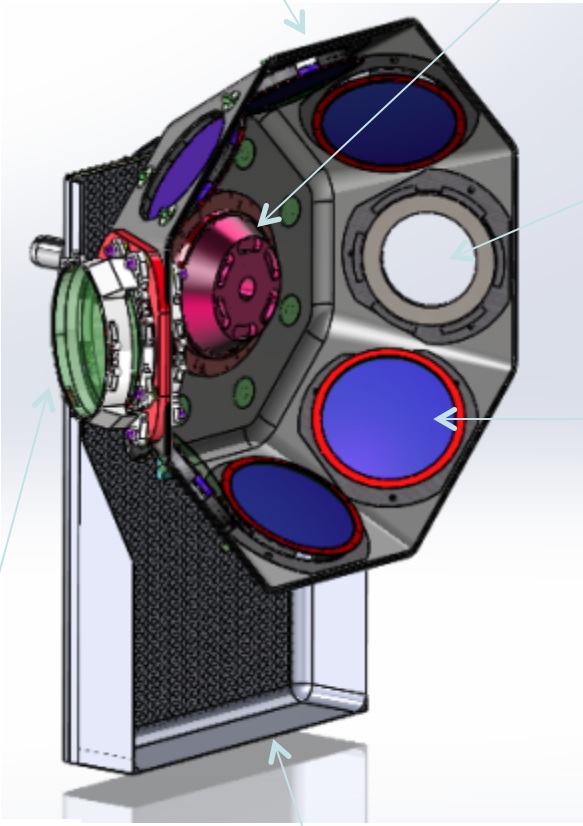

Counter Mass Mounts

Filter Mounts With Mask (Qty 6)

Indexer unit

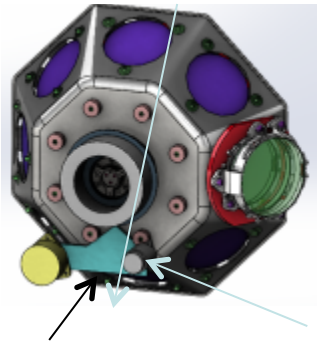

Launch lock

GRISM Mount With mask

Mounting Bracket

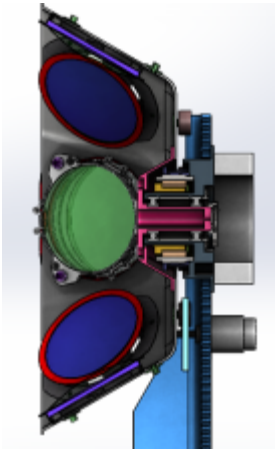

Position Sensor

Element wheel video

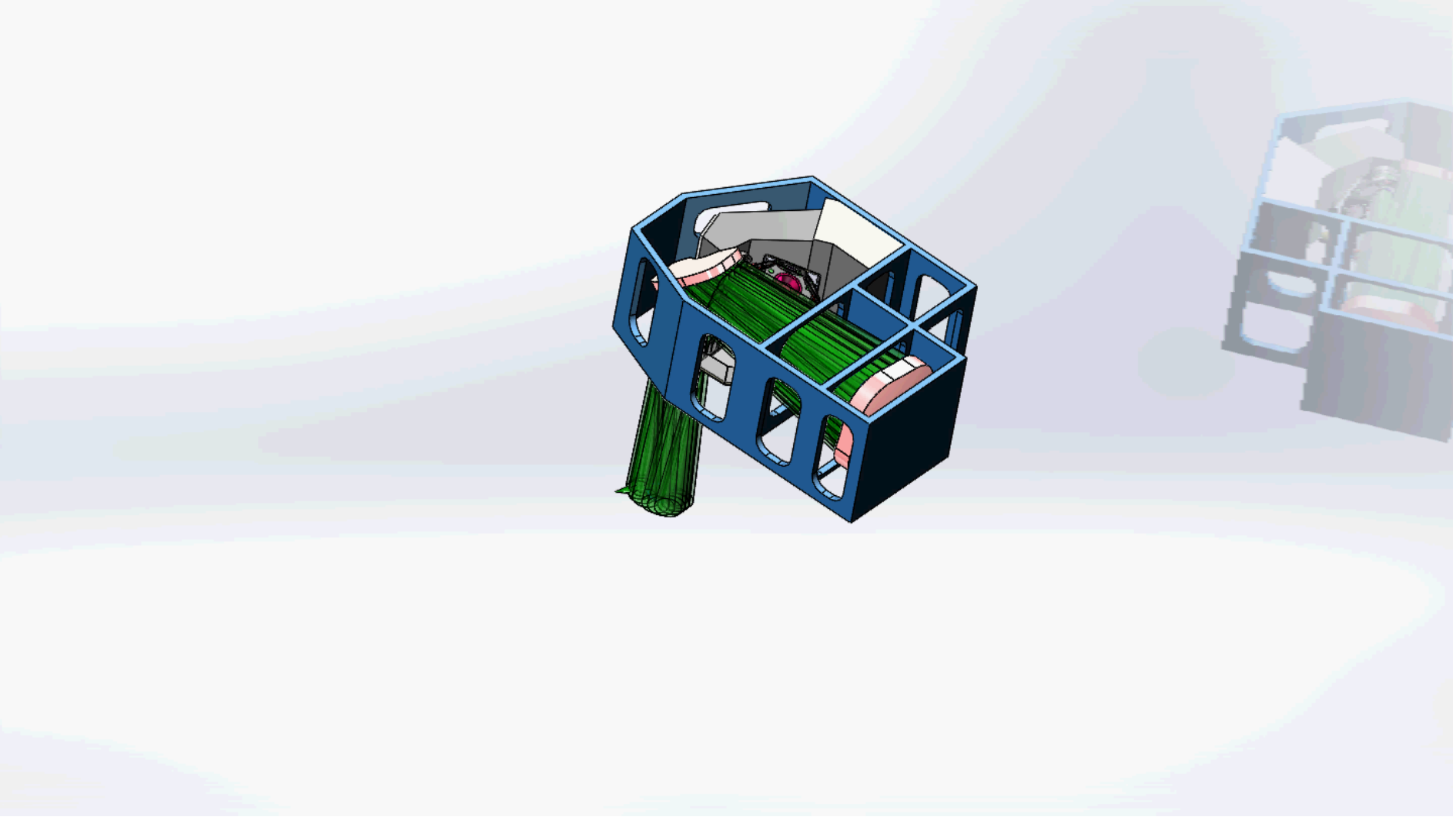

F2 Mechanism Assembly Concept Design

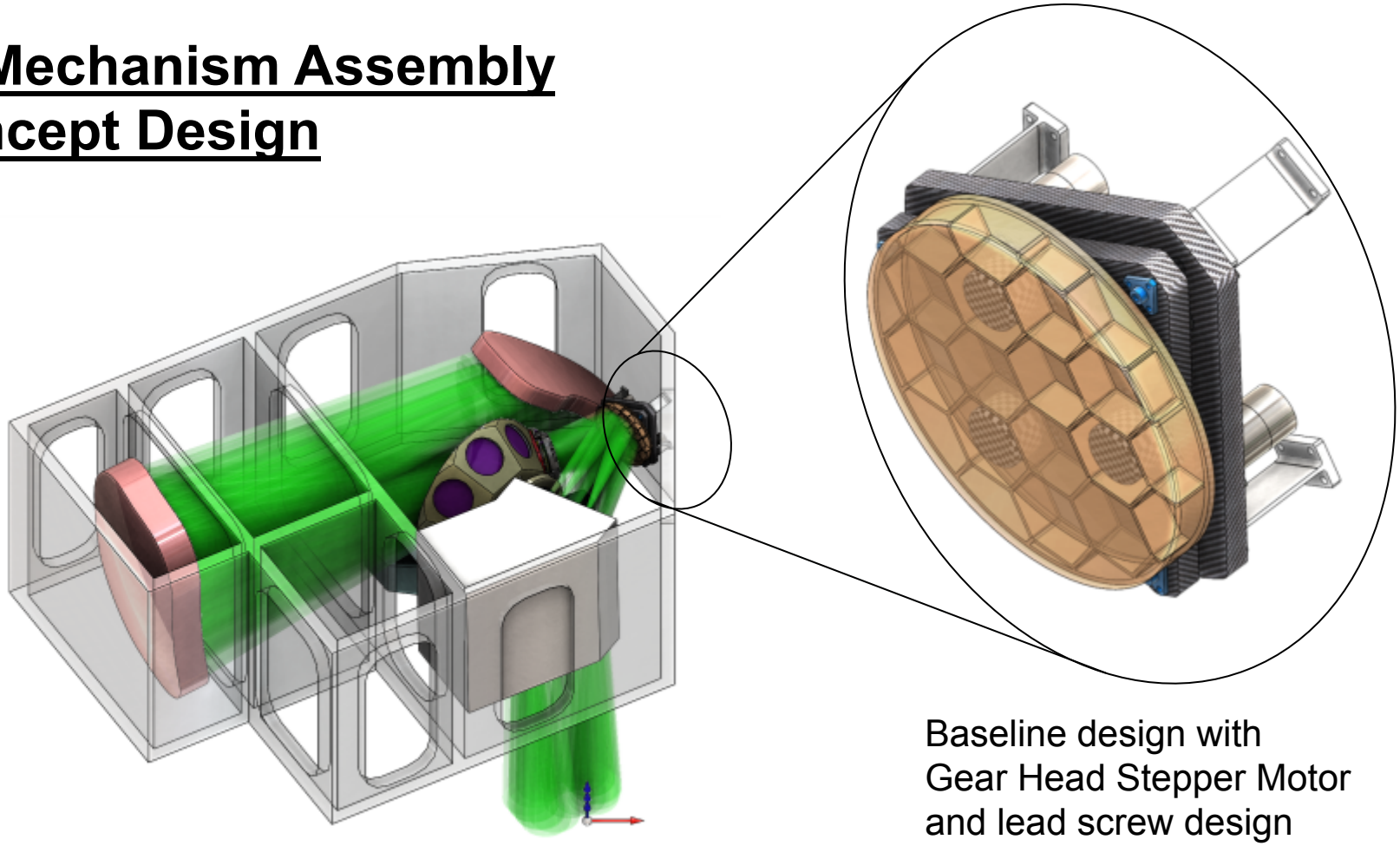

Baseline design with Gear Head Stepper Motor and lead screw design

Working a concept design and working with mechanical team to provide space and mounting location.

WFIRST IFU Design

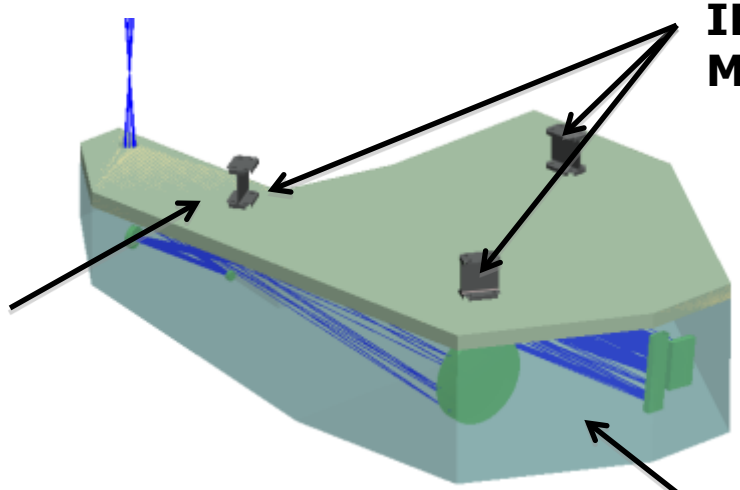

IFU Assembly v4-2-5

Harness diagram

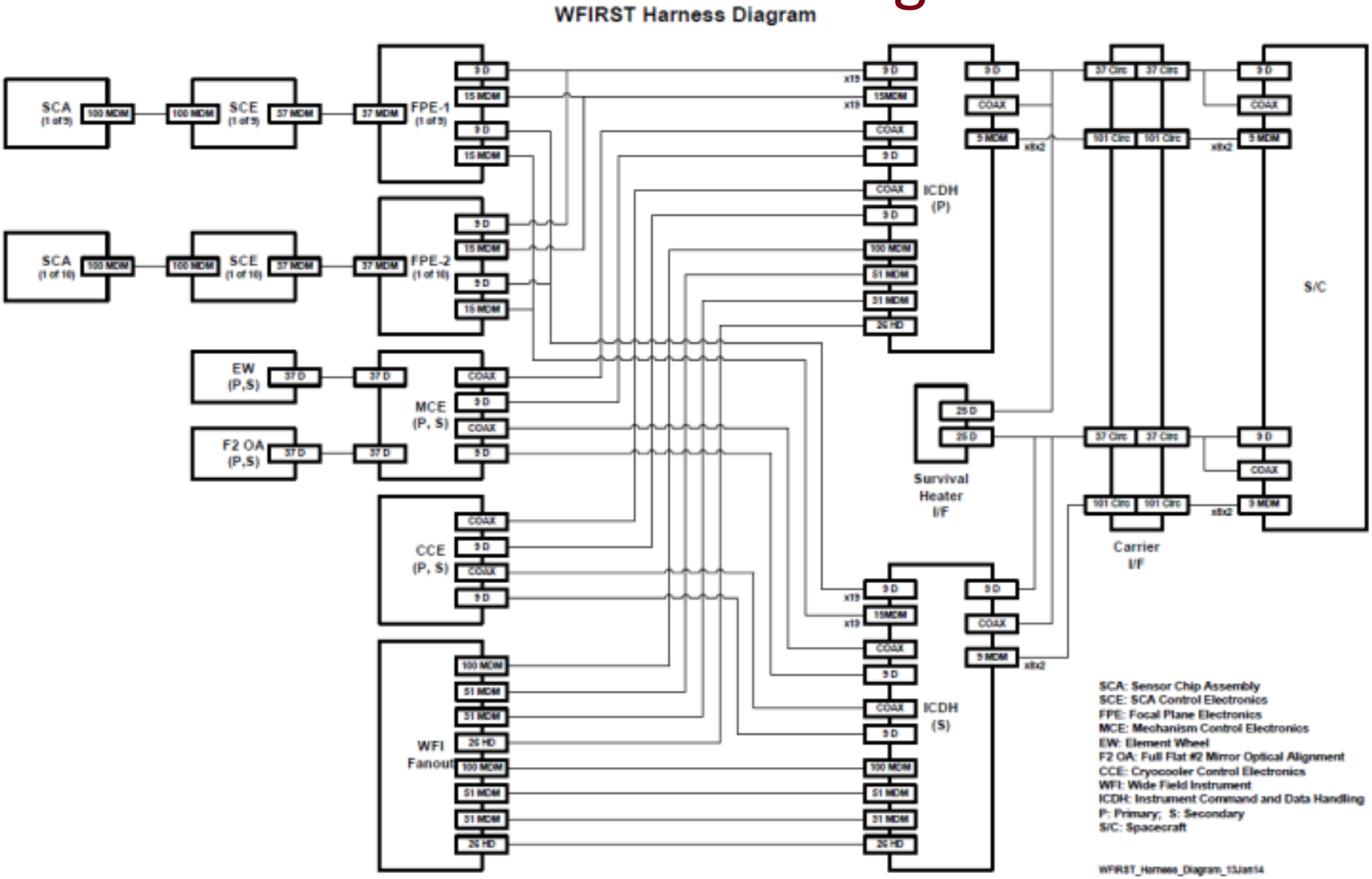

Cooler Layout

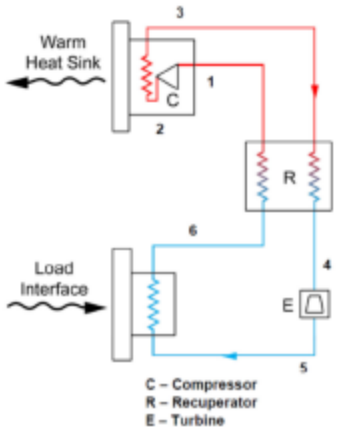

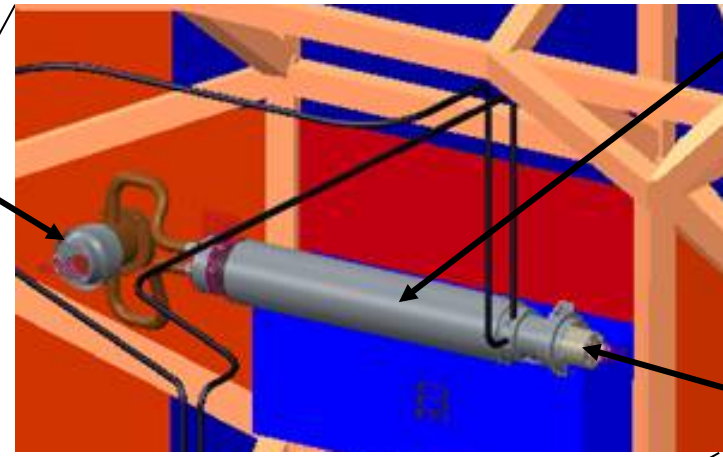

Compressor & Aftercooler HX

Recuperator

Turboalternaor

Cryocooler Electronics

IFU Cold HX

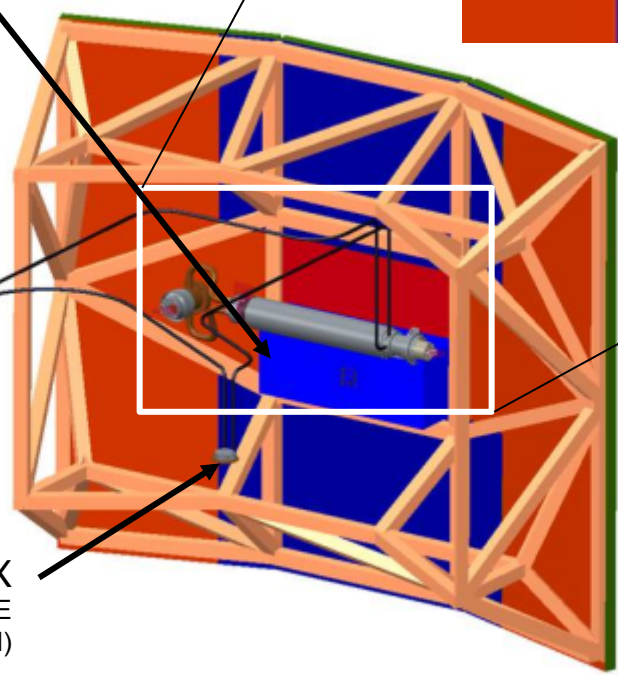

WF Cold HX
(TEMPERATURE CONTROL LOCATION)

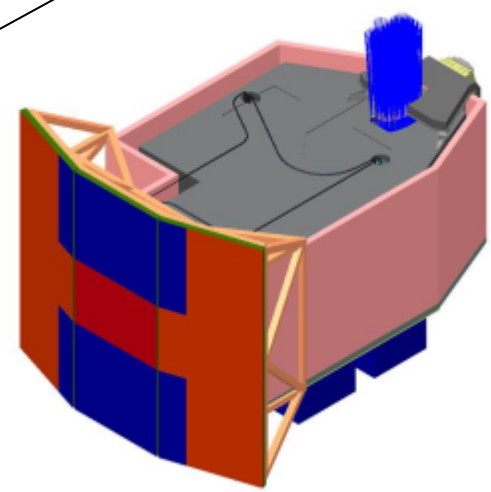

Refractive element risk reduction

- Status of Grism and filter EDU
  - Filter substrate, element 1 of grism received
  - Other grism elements in fabrication
  - Diffractive surface analogs, testable in visible, ordered and due in June (test for efficiency)
    - Followup with NIR EDU, full aperture versions
  - Mounts designed, need analysis and testing
- Expect to assemble grism later this CY and test, first ambient and then cold, in FY15
- Expect to order filter coating coupons late this FY as well
  - 1 R3.7, wide, grism bandpass coatings

Error budgeting

- Up until now we have used top-level "top down" error budgets to get a rough idea of the difficulties in building the WFI and to do initial I&T planning
- We are building a "bottoms up" error budget including all fabrication and I&T stages, thermoelastic errors, compensators during alignment and operation
  - Substantial effort, not yet at the stage of showing a complete bottoms up rollup consistent with top level requirements of 1.2um diffraction limit plus jitter
  - However the thermal modeling (examples below) seems consistent with reasonable (>1K) temperature control in the optical bench and across mirrors

Cycle5 layout options: residual error distribution and layout patterns; quartile distributions shown

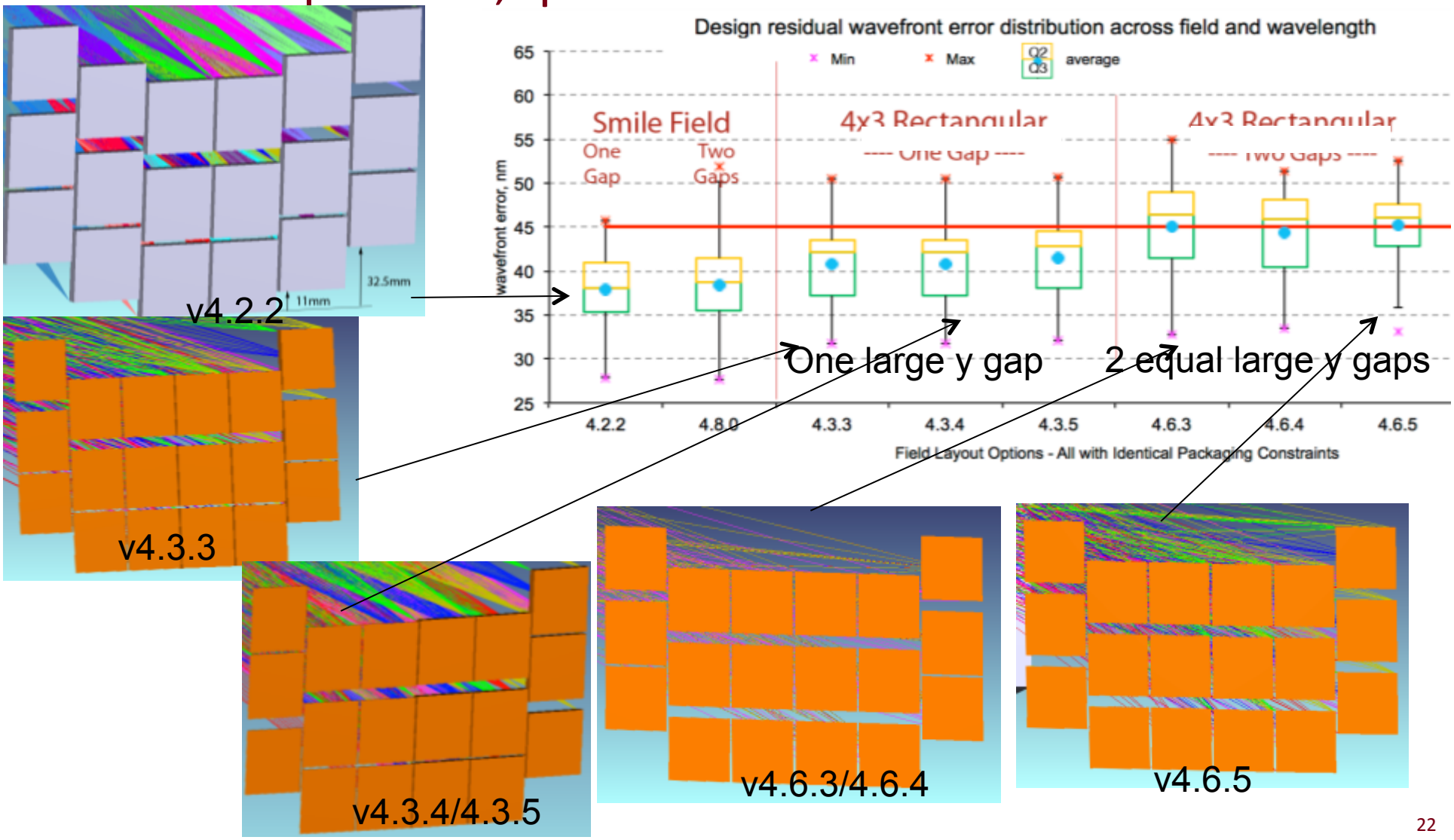

Spring/fall overlap analysis

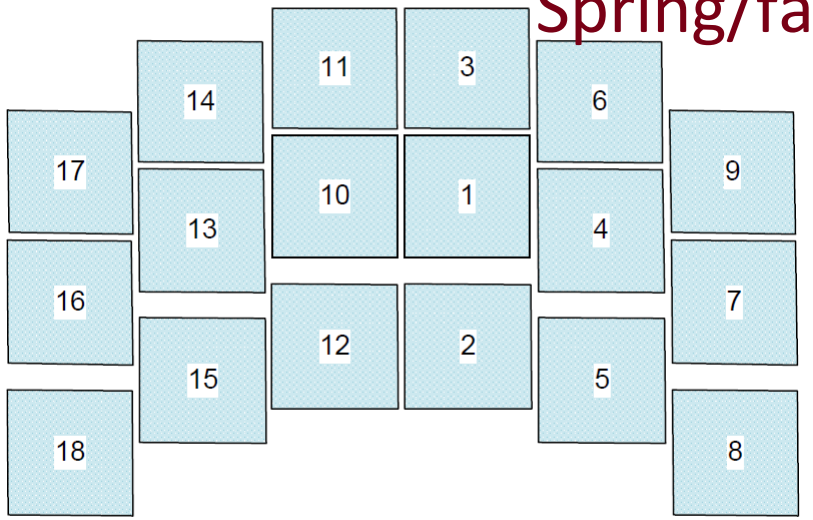

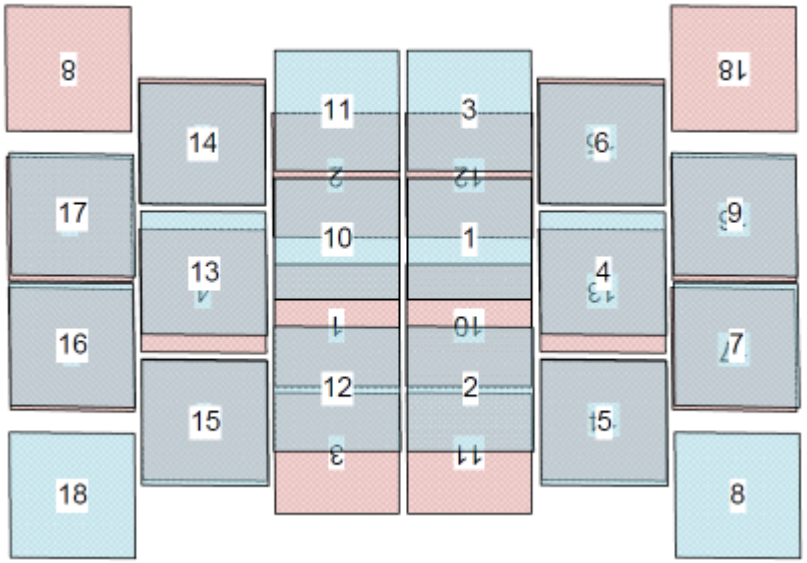

Design iteration 4-2-2

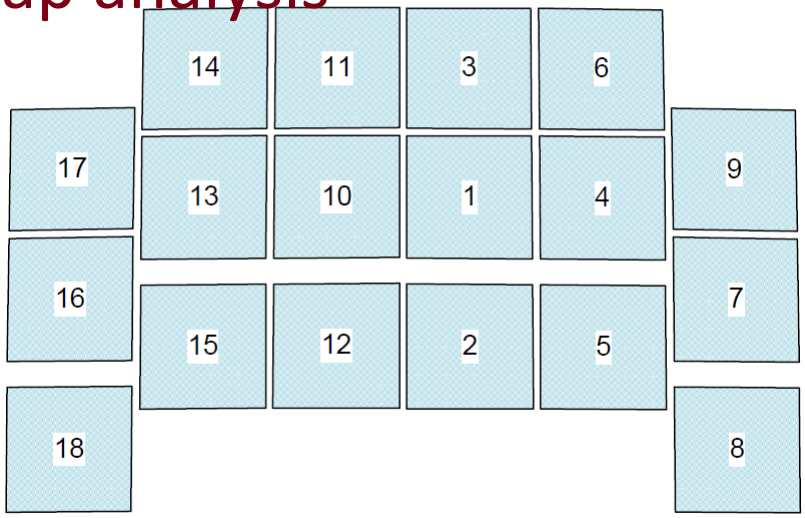

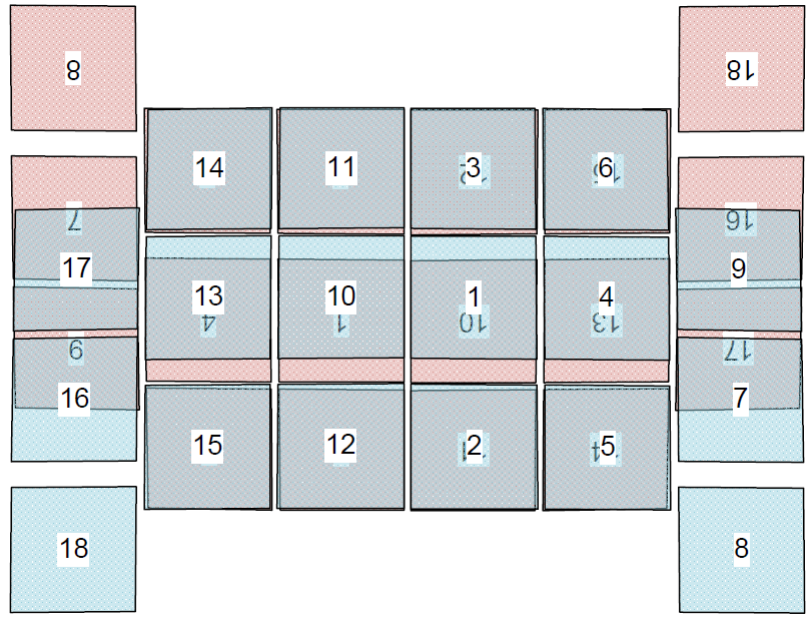

4-3-5

Update on H4RG detector development

- Expect to receive last SCA from 1st sublot of Process Optimization lots in April
- Will review data and pick best recipe
  - Performance, yield are the main discriminators
- Will then (~June) kick off 1st part of Full Array lot
- In parallel, the rest of the Process Optimization lot parts are entering final fabrication phase and will be arriving and being tested this summer
- We will then have the opportunity to hold a 2nd round of reviews to pick recipe for the rest of the full array lot

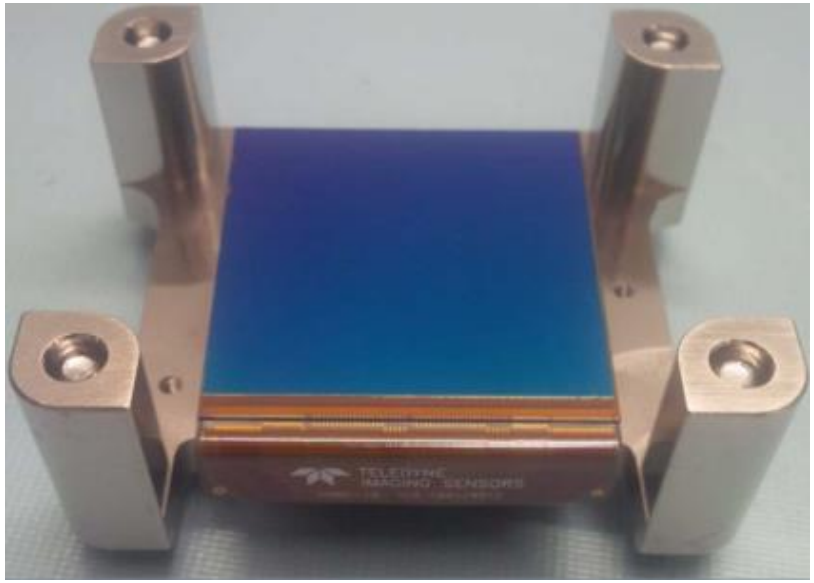

WFIRST-AFTA Detector Milestones

MS #	Milestone	Milestone Date
1	Produce, test, and analyze **2 candidate passivation techniques** (PV1 and PV2) in **banded arrays** to document baseline performance, inter-pixel capacitance, and shall meet the following derived requirements: dark current less than 0.1 e-/pixel/sec, CDS noise less than 20 e-, and QE greater than 60% (over the bandpass of the WFI channel) at nominal operating temperature.	7/31/14
2	Produce, test, and analyze **1 additional candidate passivation technique** (PV3) in **banded arrays** to document baseline performance, inter-pixel capacitance, and shall meet the following derived requirements: dark current less than 0.1 e-/pixel/sec, CDS noise less than 20 e-, and QE greater than 60% (over the bandpass of the WFI channel) at nominal operating temperature.	12/30/14
3	Produce, test, and analyze **full arrays with operability > 95%** and shall meet the following derived requirements: dark current less than 0.1 e-/pixel/sec, CDS noise less than 20 e-, QE greater than 60% (over the bandpass of the WFI channel) , inter-pixel capacitance ≤3% in nearest-neighbor pixels at nominal operating temperature.	9/15/15
4	Produce, test, and analyze final selected recipe in **full arrays demonstrating a yield of > 20%** with operability > 95% and shall meet the following derived requirements: dark current less than 0.1 e-/pixel/sec, CDS noise less than 20 e-, QE greater than 60% (over the bandpass of the WFI channel) , inter-pixel capacitance ≤3% in nearest-neighbor pixels, persistence less than 0.1% of full well illumination after 150 sec at nominal operating temperature.	9/15/16
5	Complete environmental testing (vibration, radiation, thermal cycling) of one SCA sample part, as per NASA test standards.	12/1/16

Integrated modeling

- Early look at {low} vibration input from cryocooler
- Thermoelastic sensitivity analysis

WFI Cryocooler Exported Vibration

- WFI is evaluating a Brayton Cryocooler from Creare
  - Uses ~75% of power of similar HST/NICMOS cooler
  - Broadband operational forces at/below detectable threshold; NICMOS cooler was <u>not</u> detected in HST ops
- Brayton cooler much more benign than JWST/MIRI cooler
  - Much lower forces due to turbine vs reciprocating compressor
  - Does <u>not</u> require isolation system or deployment
  - Simpler structural dynamics (e.g. no"slinky" for deployment)
- Cooler Force Spectrum Comparison (Brayton cooler values per next page)

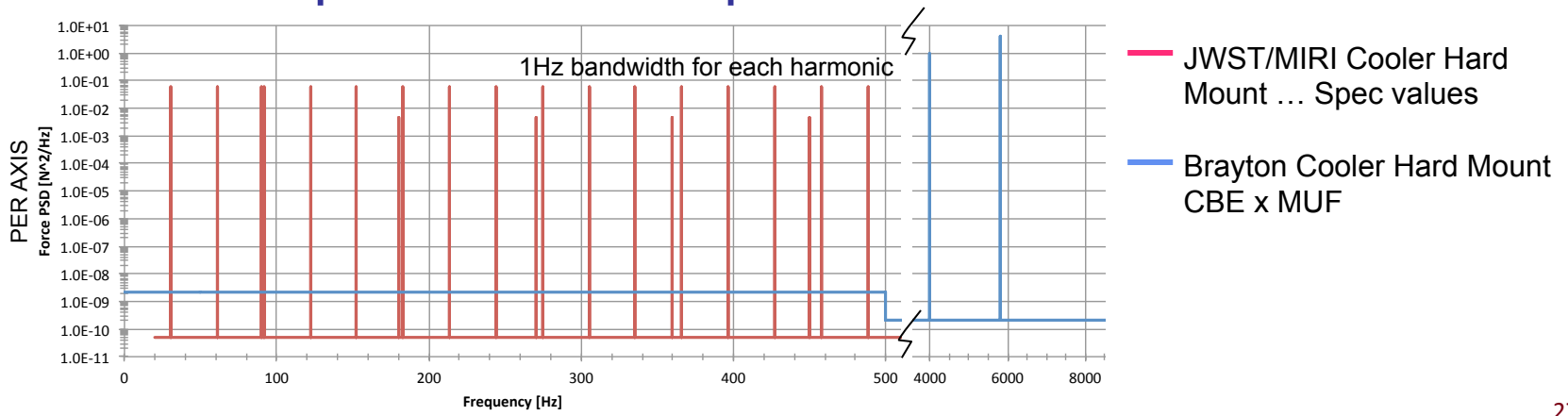

Brayton Cryocooler Disturbance Table

- Values are preliminary

	CBE PER AXIS	with MUF	PSD with MUF
0-500 Hz	0.1 mN rms	1 mN rms	2E-09 N^2/Hz
4 kHz	1 N	1 N	1 N^2/Hz*
7 kHz	2 N	2 N	4 N^2/Hz*
			*1 Hz bandwidth

- The x10 broadband cooler disturbance amplitude MUF (Modeling Uncertainty Factor) shown above is incorporated into a jitter analysis MUF that also accounts for uncertainties in structural and optical modeling
  - Results on following page include a jitter analysis MUF of 10.85<20 Hz, 13.26>40Hz, with a linear ramp between 20 and 40 Hz

Brayton Cooler Induced LOS and WFE Jitter

Jitter at WFI Focus

LOS: 14 masec req all sources: x66 margin

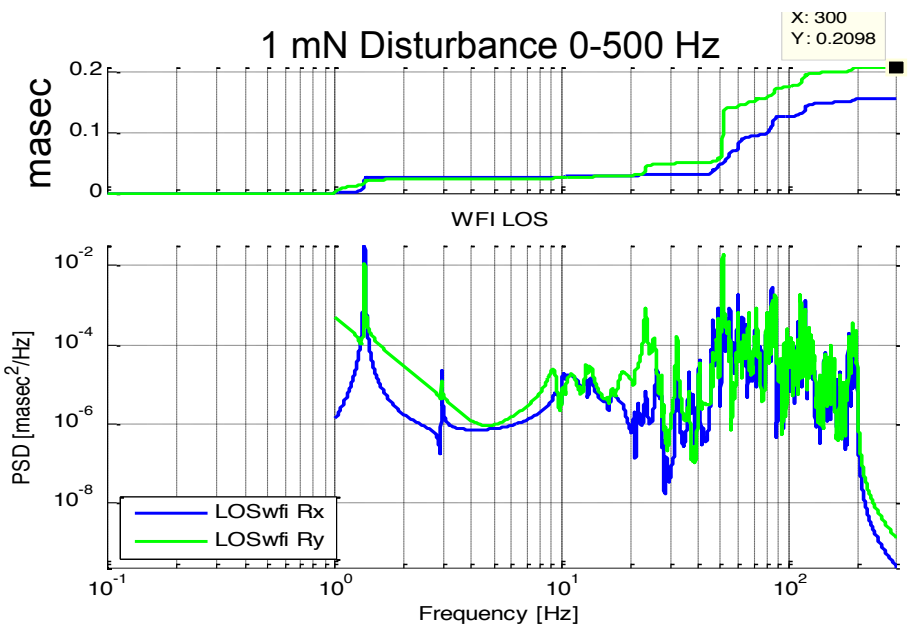

WFE: 0.707nm req all sources: x102 margin
(plots omitted)

Jitter at Telescope Intermediate Focus

LOS: 14 masec req all sources: x109 margin

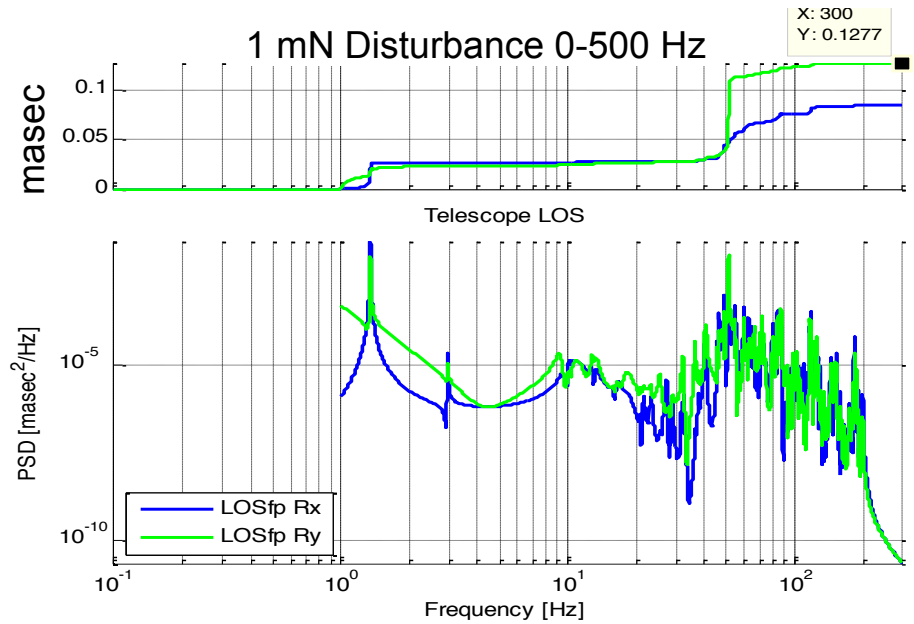

WFE: 0.707nm req all sources: x193 margin
(plots omitted)

Thermoelastic sensitivity analysis

- In order to understand, in a detailed, bottoms-up error budgeting sense, the thermal control requirements, we done thermoelastic sensitivity analysis
- We used the structural model with operating temperatures applied and thermal properties at those temperatures
- Applied (artificially, ignoring the heat flows these entail) 1K gradients along each axis, plus a 1K bulk temperature change
- 1K is a unit change, we are assessing the sensitivity, ie derivative of component and system wavefront error with respect to these perturbations
- Outputs include sensitivities and ability to derive thermal requirements within the instrument
- Focal plane thermal requirements are tighter and are set based on thermal testing of detectors
- For cycle3 we are doing this at the central field point only; later we will incorporate more field data for accuracy

Summary of Bulk/Gradient Sensitivities

WFI Image Plane delta-WFE due to each temperature case [nm/K]

Optic	OB	F1	M3	F2
Bulk	102.35	0.04	0.77	0.33
GradX	96.69	0.01	5.73	0.00
GradY	96.72	0.01	0.27	0.00
GradZ	96.72	0.99	0.17	1.93

Each case has supporting analysis; we show the worst case (M3 gradX) below as an example

M3 X Gradient Analysis Parameters

Parameter	Value
FE File	140204_M3-thrmal-dist-gradntX.op2
LOM	v20130711_LOM_AFTA_WFIcycle3
Bulk data	wfirst-drm0-cooldown-12-5-13-TS-432000-V2_bulk
Field point	4
Alignment flag	1
Figure flag	1
SM focus flag	0
Rigid angle, theta	auto
MUF	1

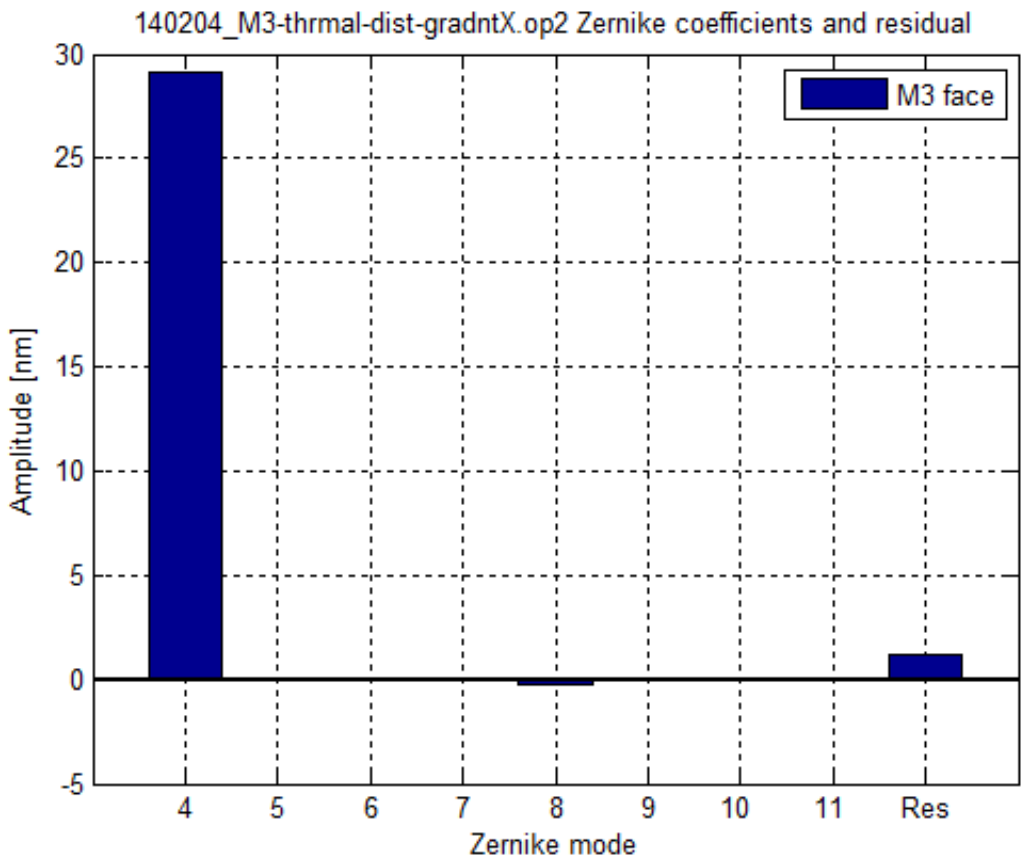

M3 X Gradient Surface Figure Zernikes

Wide Field Infrared Survey Telescope - AFTA

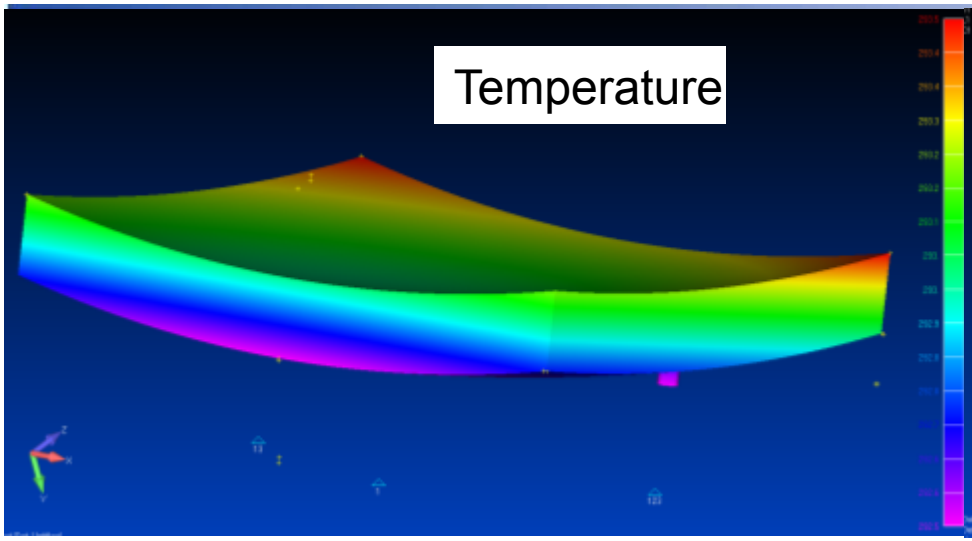

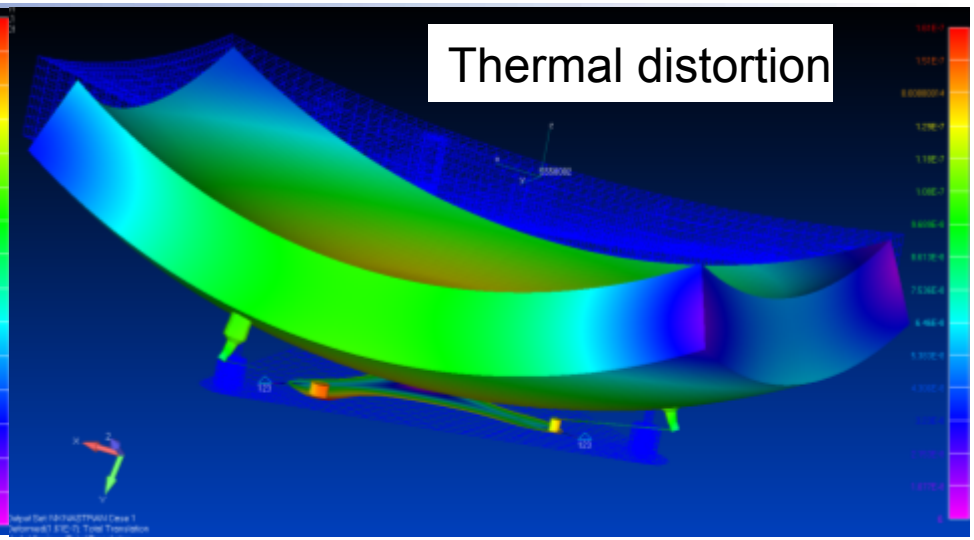

Surface Figure

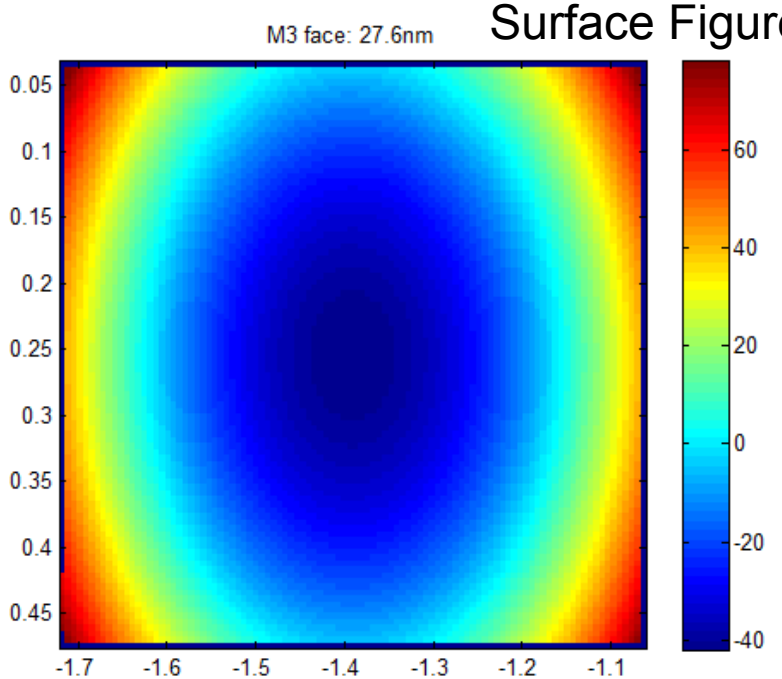

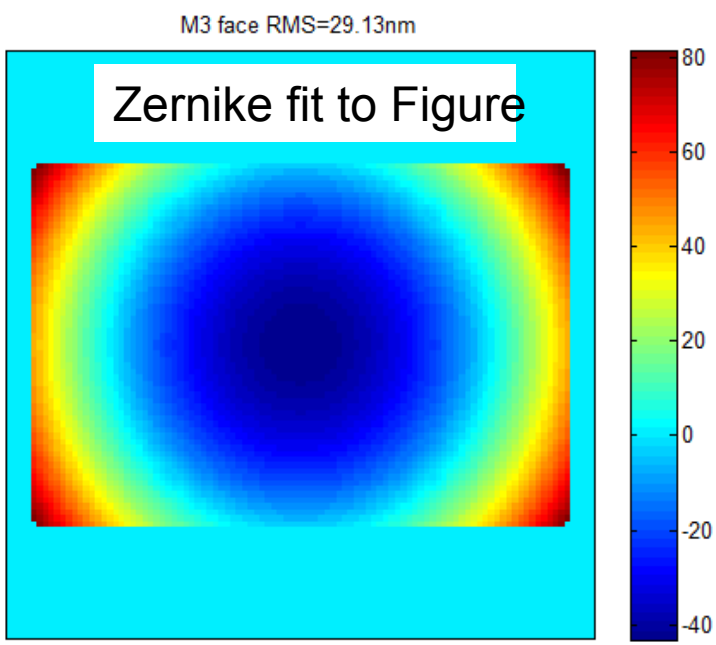

M3 X Gradient Optics Contributors

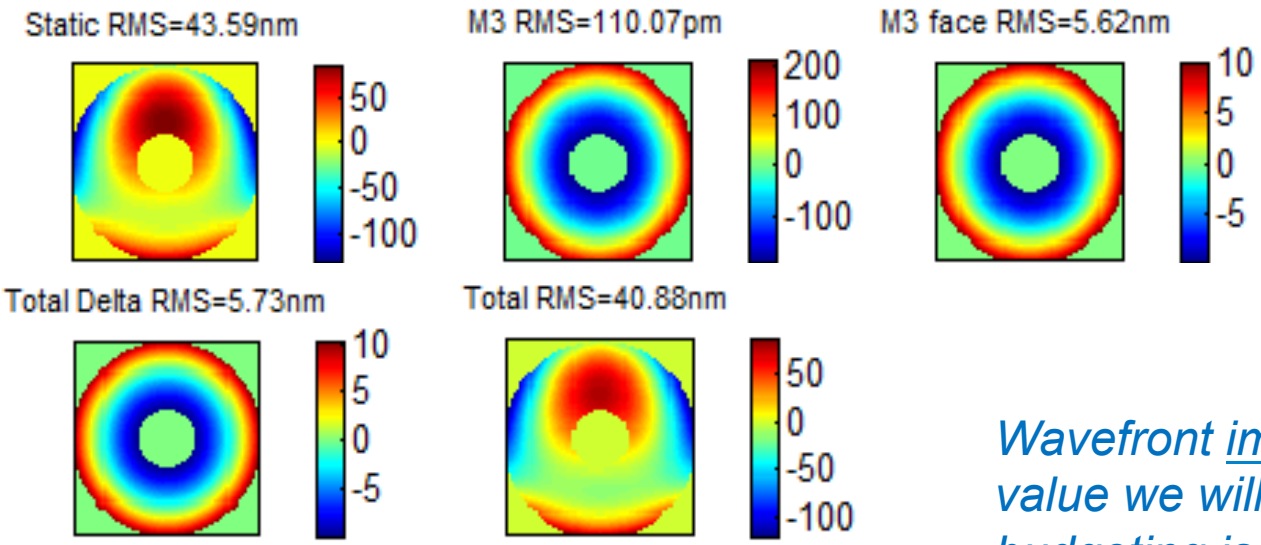

Wavefront improves – sensitivity value we will use in error budgeting is root(abs(difference of squares)), 15 nm rms here

Rigid Optics Motions [um,urad]

Row	Tx	Ty	Tz	Rx	Ry	Rz
M3	-0.09	0.01	0.01	0.04	-0.01	0.01

Rigid Optics Induced WFE [nm]

Vertex	Tx	Ty	Tz	Rx	Ry	Rz	Total
M3	0.11	0.00	0.00	0.00	0.00	0.01	0.11