Observatory/SC Overview

Mark Melton/GSFC

Observatory Overview

- Atlas V 531 launch vehicle
- Obs. Wet Mass: ~6500 kg
- Obs. Dry Mass: ~4120 kg (w/marg)

  Obs Dry Mass: ~3450 kg (CBE)
  - S/C: 1360 kg
  - Telescope: ~1440 kg (~1210 kg exists)
  - Instrument Carrier: ~200 kg
  - Wide Field: ~450 kg
- Obs. Power: ~2300 W (w/margin)

  Obs. Power: ~1775 W (CBE)
  - S/C: 565 W
  - Telescope: 1000 W (mostly heaters)
  - Wide Field: 210 W

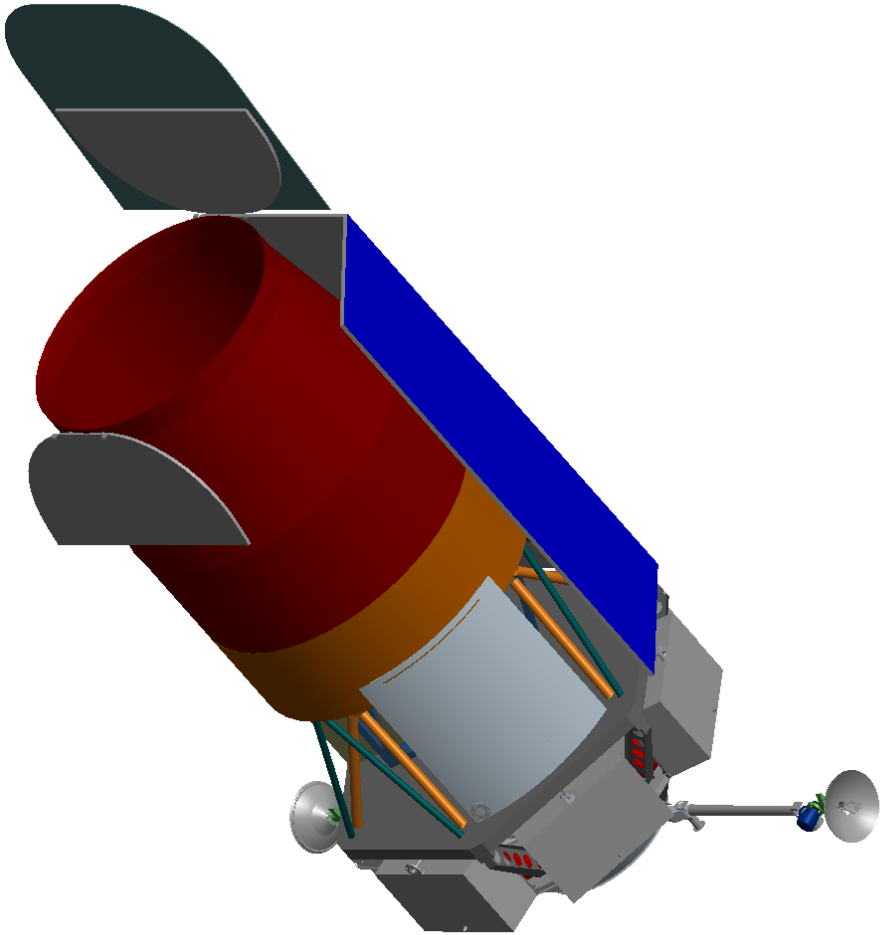

Spacecraft Concept

- Spacecraft bus design relies on recent GSFC in-house spacecraft designs, primarily SDO and GPM
- 6 serviceable/ removeable modules
  - Power
  - Comm
  - C&DH
  - ACS
  - Tele
  - Wide Field Elec
- Latch design reused from MMS
- 2 deployable/restowable HGAs
- Atlas 531 Payload Attach Fitting (PAF)
- 6 propellant tanks

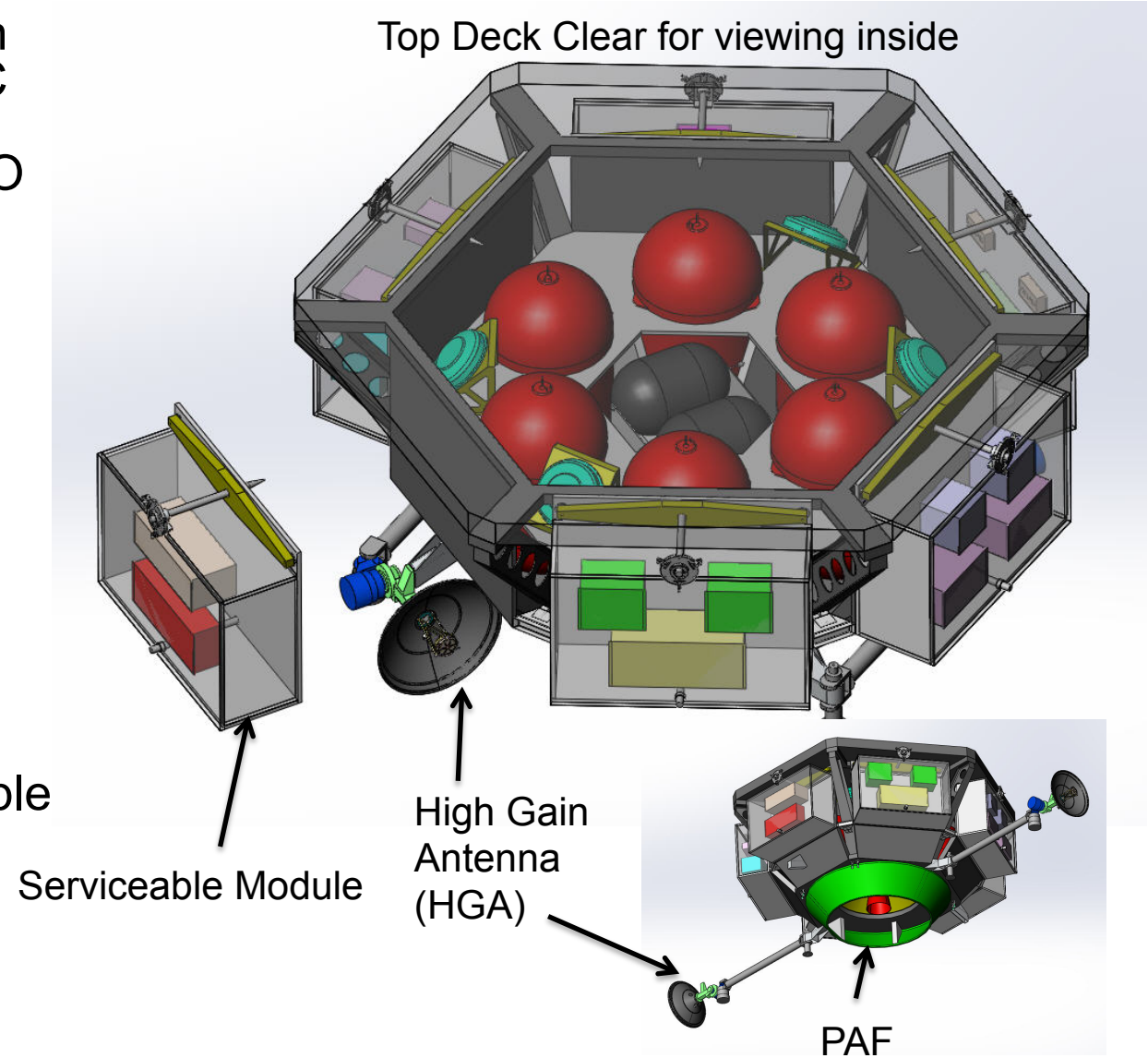

Preliminary Bus Thermal Analysis
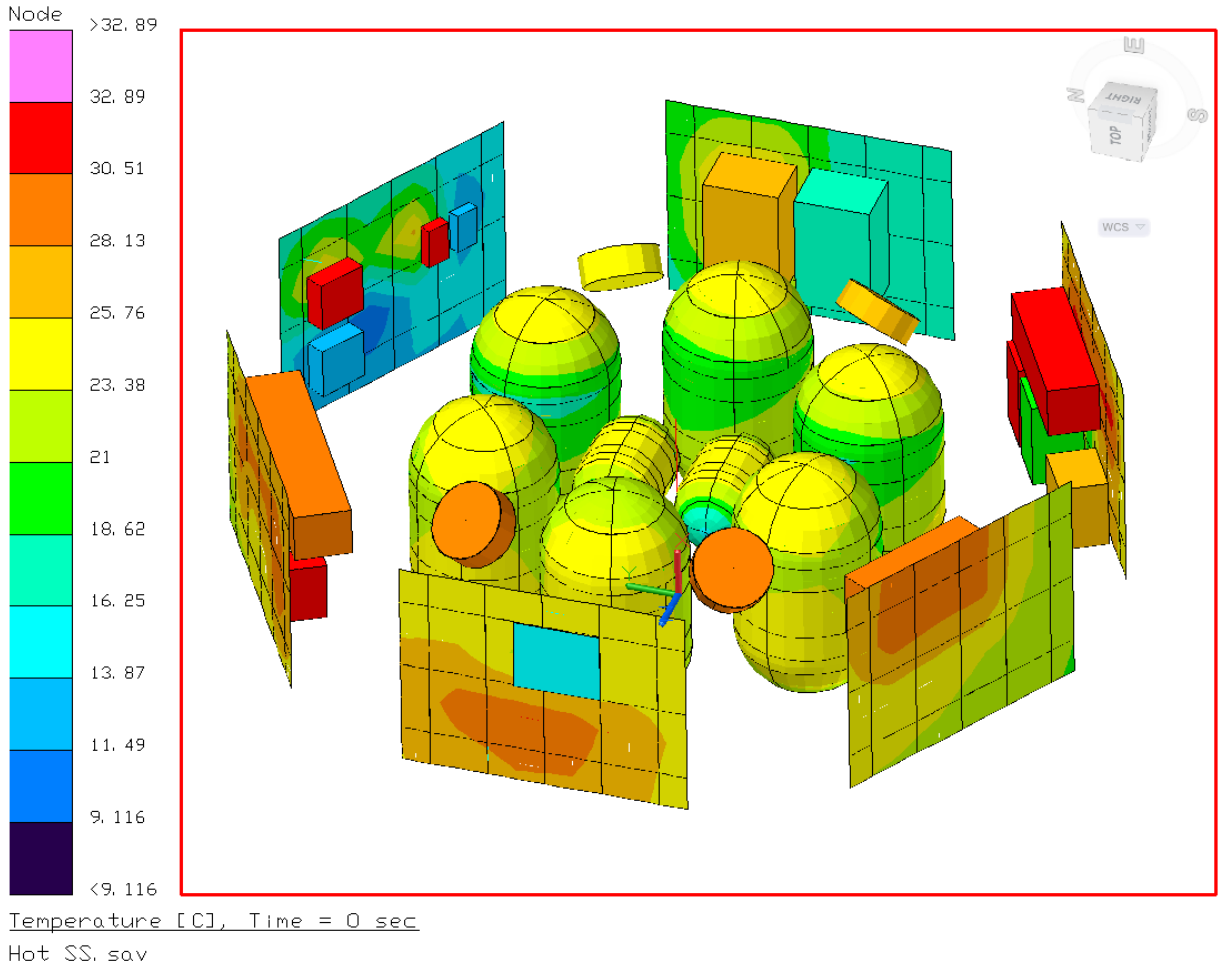
- Simple, passive thermal design
- Large radiator margins