Wide field instrument update

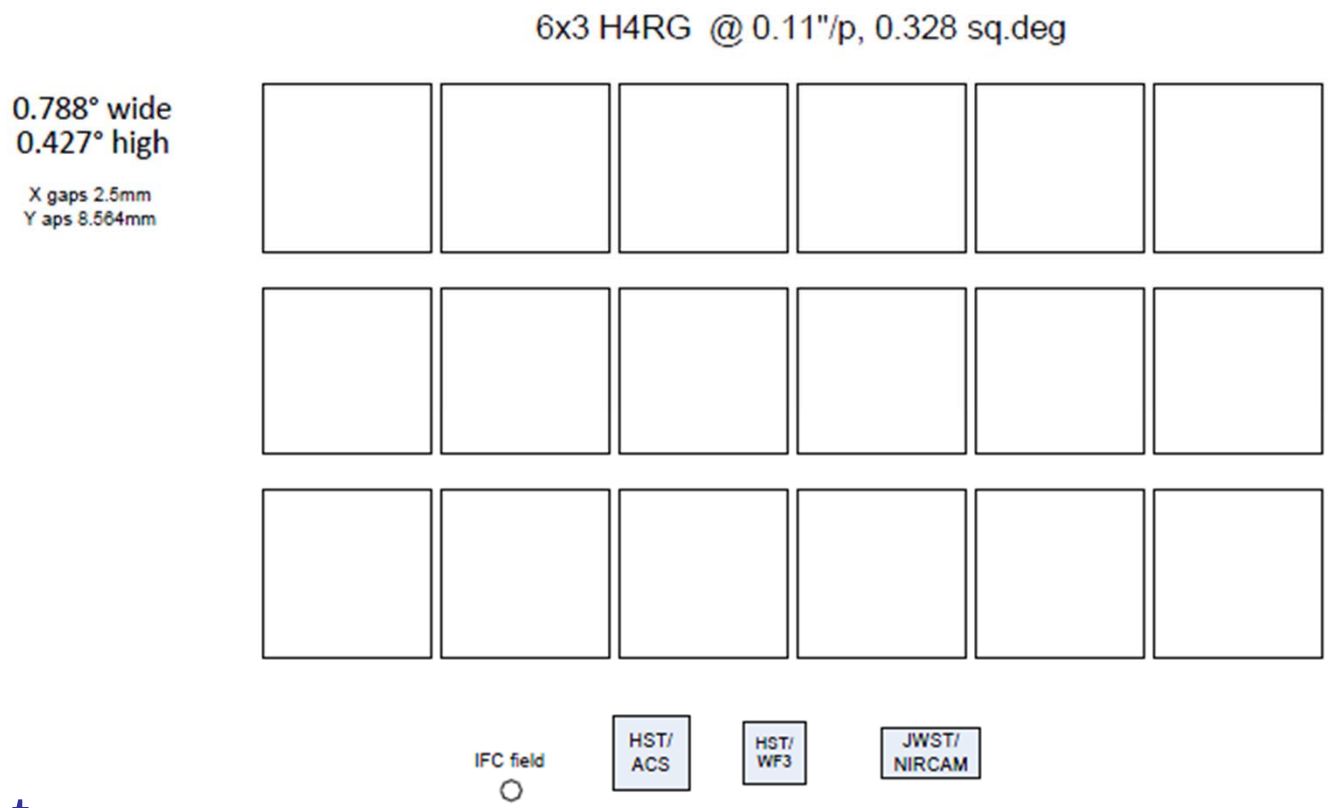

David Content

New FOV figure: Each square is an H4RG

- January meeting – showed ray trace, general packaging plan
  - Not a lot of detail
  - Optical performance update given to SDT telecon
- We have iterated the overall instrument since then
  - Nearly complete mechanical concept
  - Mechanism details for element wheel and focus compensator (on F2, last optic before FPA)
  - Shielding for Geo radiation environment
  - Working passive thermal approach
  - Servicing interfaces detailed
  - Now analyzing structure for first frequency
  - Master equipment list generated, PriceH costing started

Strong mechanical analogy to HST/WF3

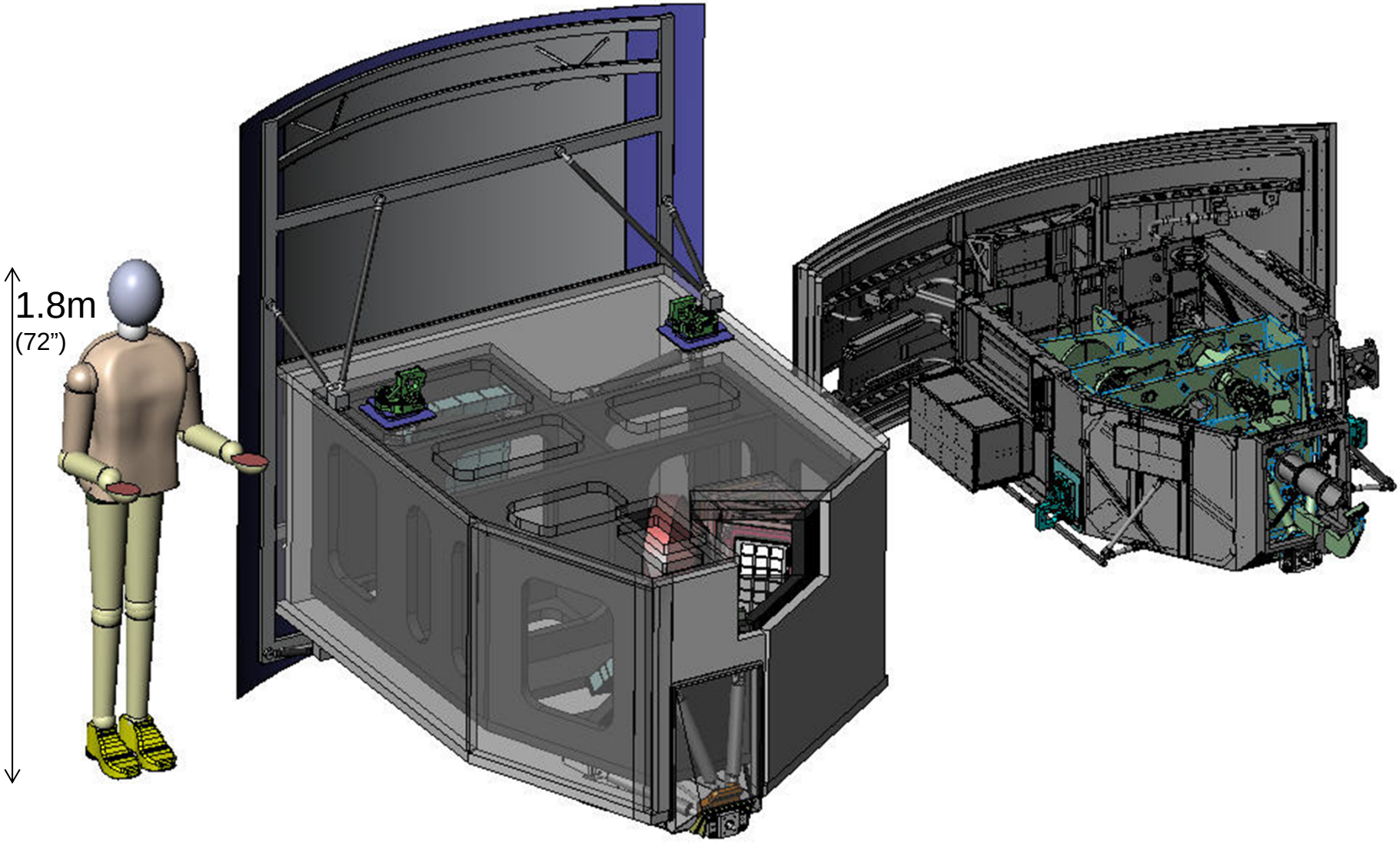

Comments on WF3 analogy

- WF3 is a wide field camera with vis and NIR capabilities, built & tested partly in house at GSFC
  - For 2.4m telescope
  - However it is much smaller field than AFTA WFIRST wide field
- WF3 is passively cooled; structure is made of composite with outer housing and inner optical bench; uses glass mirrors; has latching system; uses blind mate connectors for signal connection to s/c
- We reuse these design aspects

Widefield Instrument – Exploded view

- Wide field and integral field channels
- Wide field:
  - 3 mirrors, 1 powered
  - 18 4K x 4K HgCdTe detectors
    - 2.1um cutoff
  - 0.11 arcsec plate scale
  - Single filter wheel
  - Grism used for GRS survey
- *IFU for SNe spectra, single HgCdTe detector*
- Thermal control – passive radiators

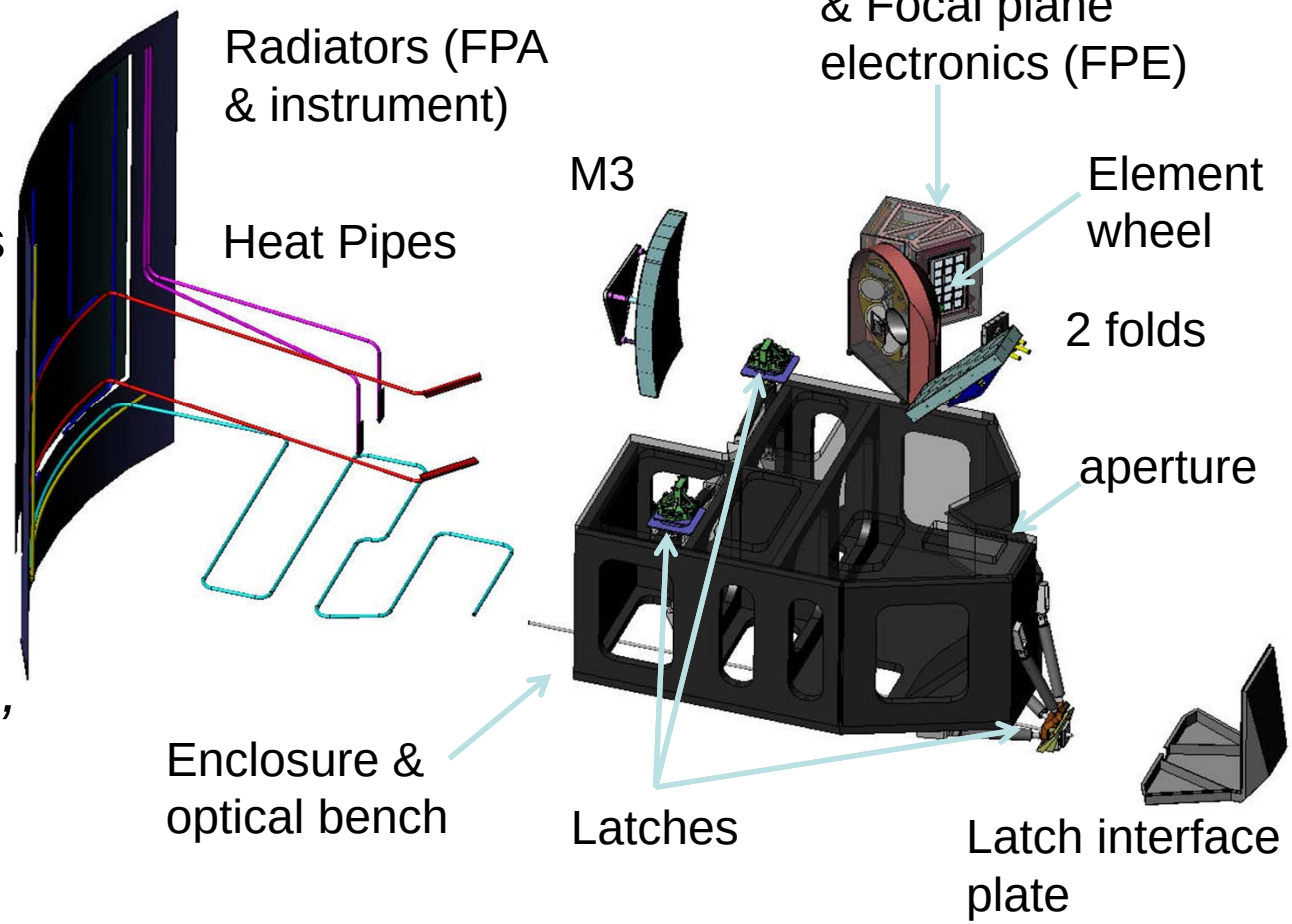

Outer housing & IFU not shown

GRS grism design completed

- Much faster (f/8) and larger field than prior slitless dispersers
- Higher angular dispersion than in prior point designs adds to design challenge
- 4 element assembly
  - Refraction and index variation used to mitigate chromatic aberrations

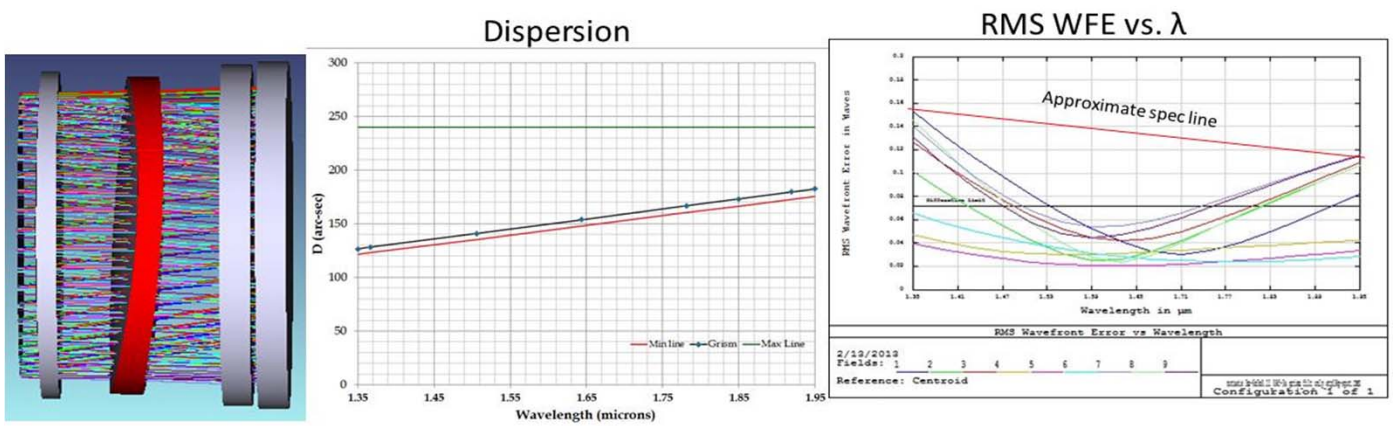

Figure 3-7: The GRS grism assembly (left), its spectral dispersion (center), and its wavefront error over a 3x3 field point grid and spectral range (right).

Thermal design & performance

- Passive design
  - Instrument and FPA radiators
  - Heat pipes on focal plane and embedded in optical bench
  - PID control on FPA
- SCA's at 120K; instrument and SCE's at 170k
  - Two zones for simplicity
- Electronics placed in s/c (room temp)
- Meeting stability over Geo orbit and small, stable gradients on FPA

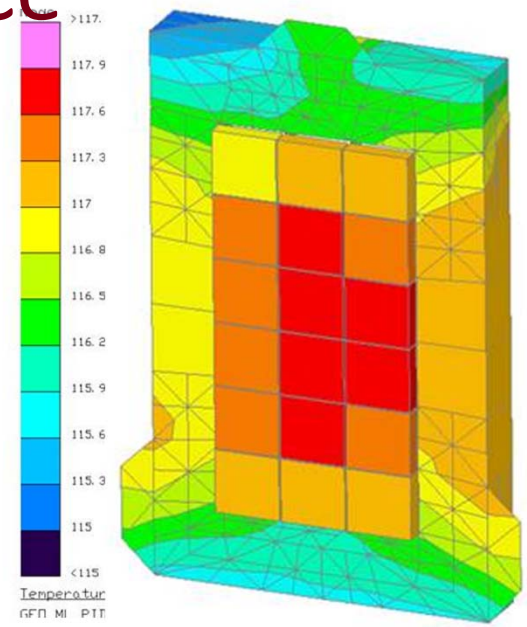

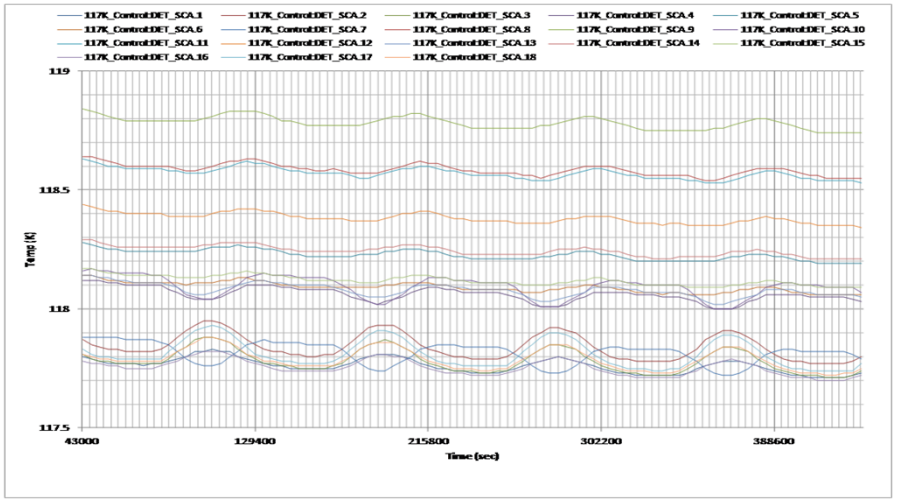

Figure 3-9: Thermal stability over several days in an inertially fixed attitude. Short and long term stability requirements are met using a PID controller.

Mechanisms

- Element wheel
  - GRS grism
  - 6 filters
  - Blank
  - Pupil mask (fixed)
  - Zero hold power
  - Canted to fit into instrument volume
- F2 focus mechanism
  - Allows adjustment of FPA focus, tip, tilt
  - Piezo screw type
    - Zero hold power
    - Um level adjustment

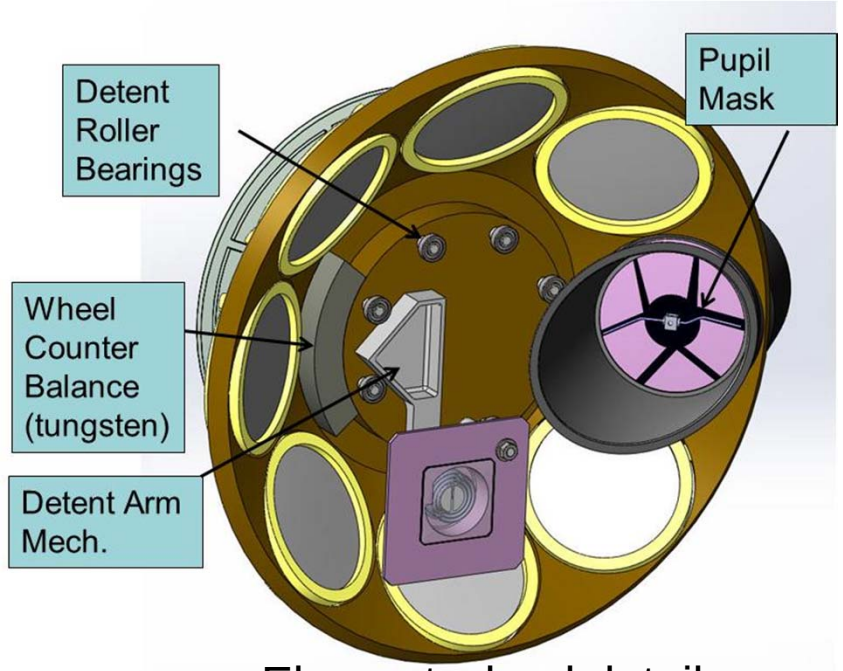

Element wheel detail

F2 focus mechanism detail

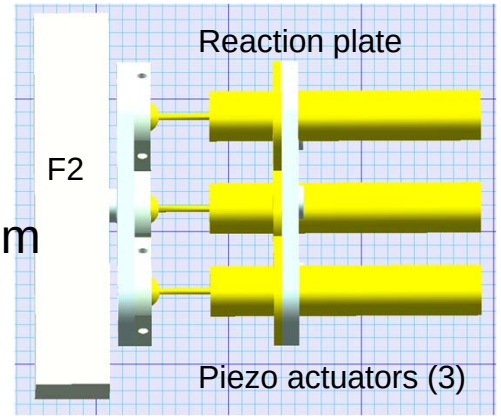

IFU [Integral Field Unit] Overview

David Vaughnn
Len Seals
Bert Pasquale
Nerses Armani
David Content

Outline:
0. Overview
1. Relay
2. Slicer
3. Spectrograph

IFU description

- An integral field spectrometer unit (IFU) is included in the wide field instrument for AFTA WFIRST
- Core science supported is SN1a spectroscopy
  - Also adds significant measurement value for GO program
- This channel returns a separate spectrum for spatial resolution element across a small rectangular field of view
  - The field of view of 3.0x3.15 arcsec is sliced
  - The slices are 0.15 arcsec in the narrow dimension by 3.0 arcsec long
  - 21 slices are reimaged to an imaging spectrometer
  - There are 21 groups of spectra, each 3.0" wide
  - Spectra are recorded on a single 1k x 1k array (18um pixels)
- The spectral bandpass is 0.6-2.0um; 2-pixel resolving power is ~100

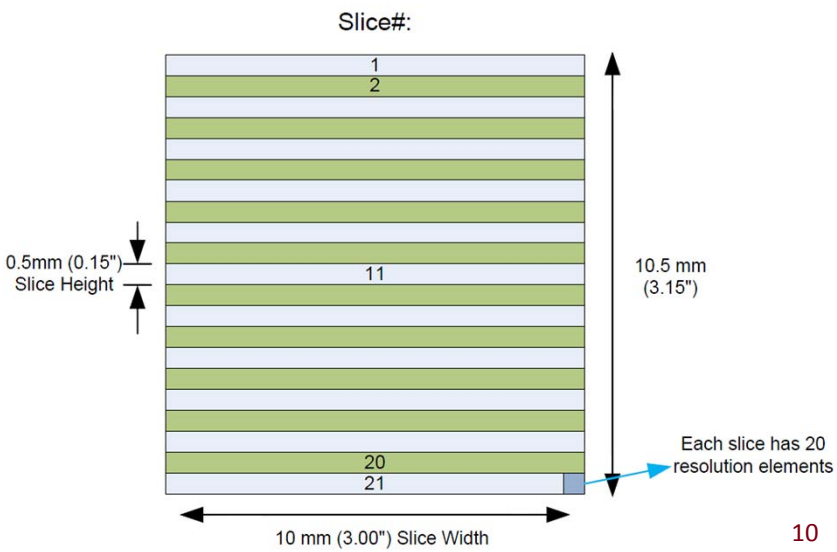

IFU field location

- Note IFU and coronagraph fields (each ~0.001° square) are shown larger than scale
- Relative field locations are to scale
- Status – complete end to end design, partially packaged as of 3/8/2013

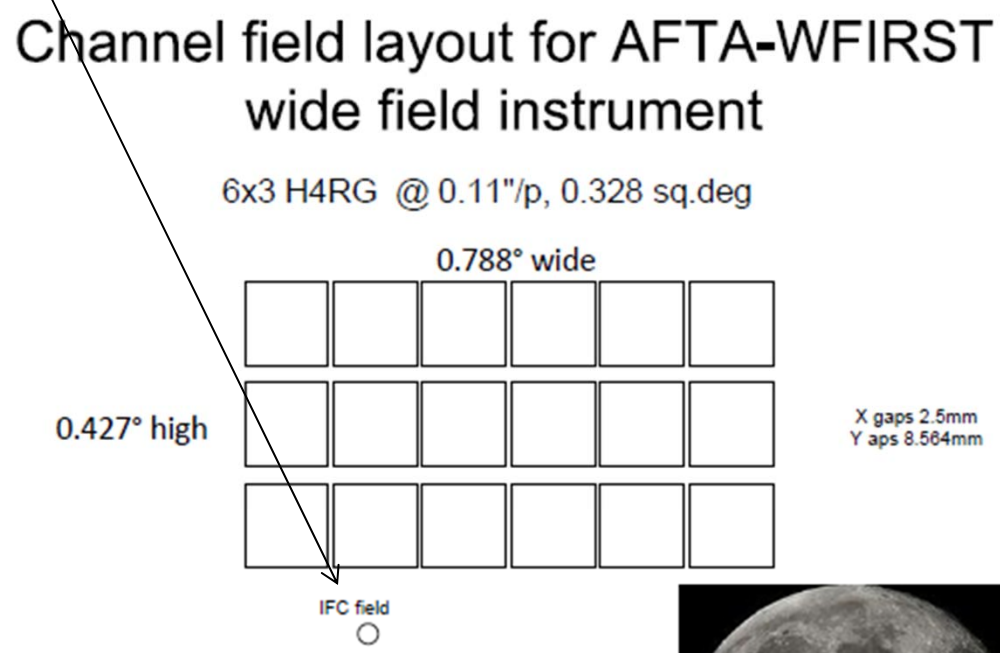

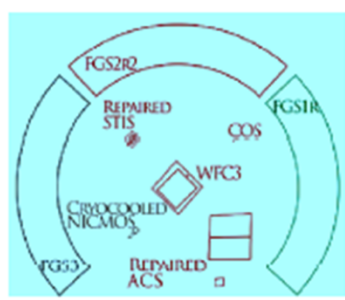

HST [all instruments]

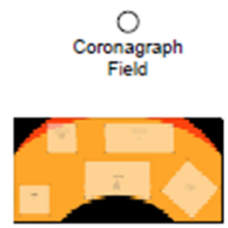

JWST [all instruments]

Moon (average size seen from Earth)

IFU overview

- IFU uses 21 slices, each 0.15”x3.0” on sky
- The height of each slice is mapped to 2 pixels
  - The pixel scale is 0.075”/pixel
  - The baseline uses the central 1kx1k of a single H2RG
- Dispersion varies over the spectral bandpass
  - Min (2 pixel) ~ 75
  - Average ~ 100
  - Higher in the blue

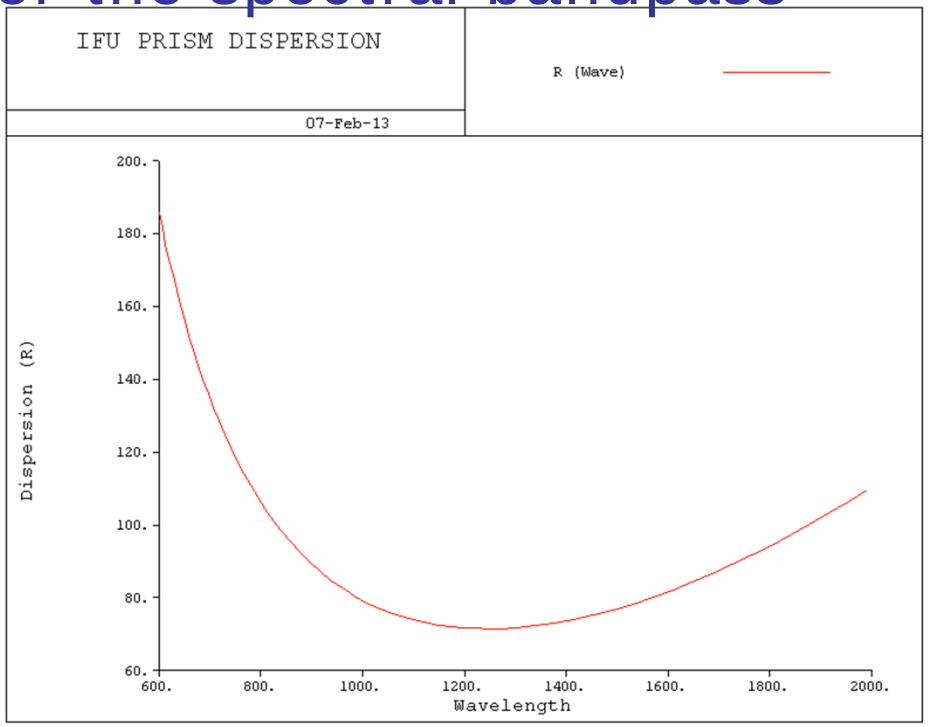

- Because the IFU works from the intermediate focus, and slices can not be made smaller than ~0.5mm, significant magnification is required. That is why there is a long path (2.3m) from the relay to the slicer.

Relay {preliminary packaging} – inverted view

1, Folded Relay

Ideal IFU focal plane location

2 folds

2 mirror relay

pickoff

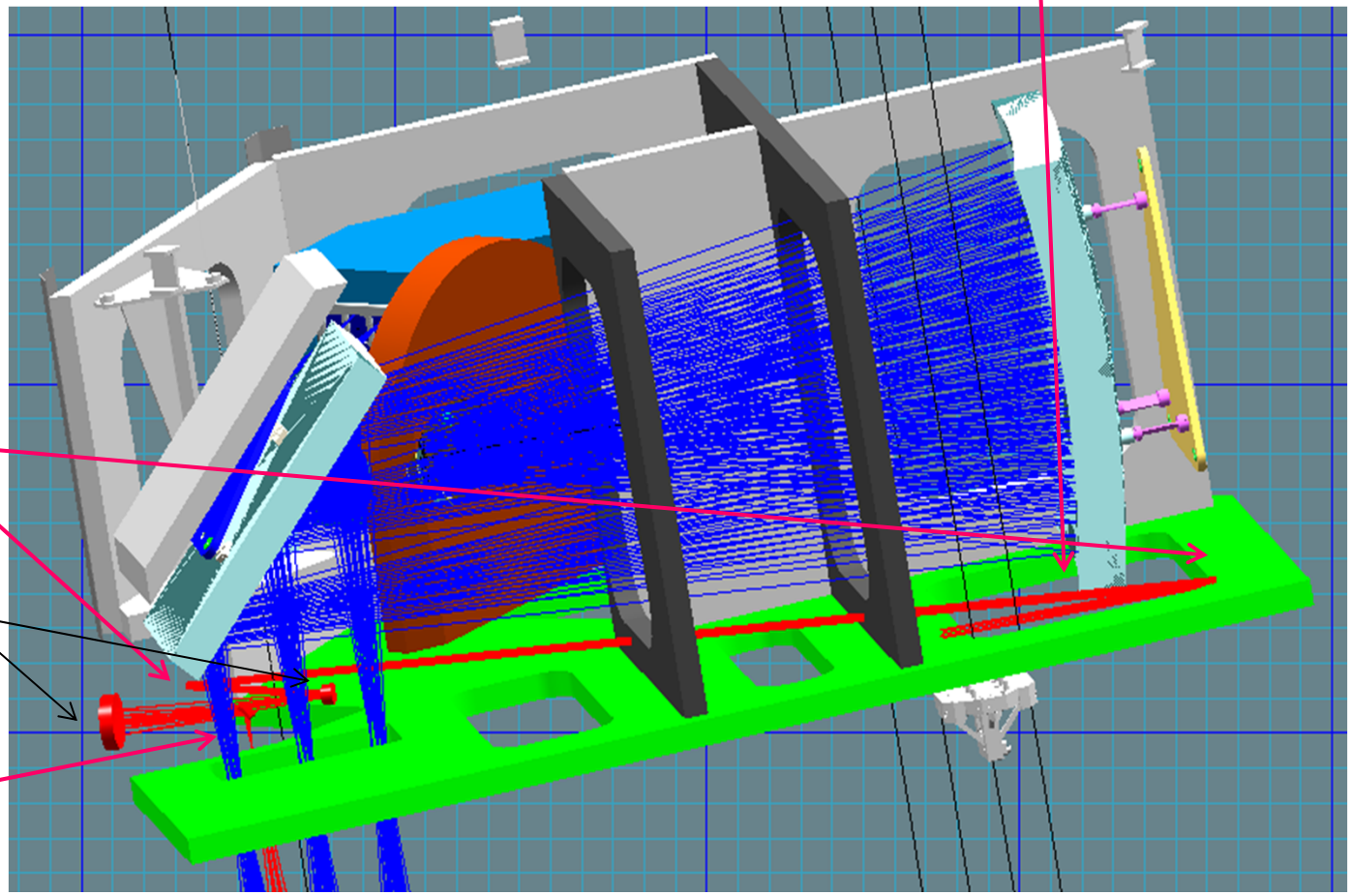

3”x3.15” field cut into 21 0.5mm slices

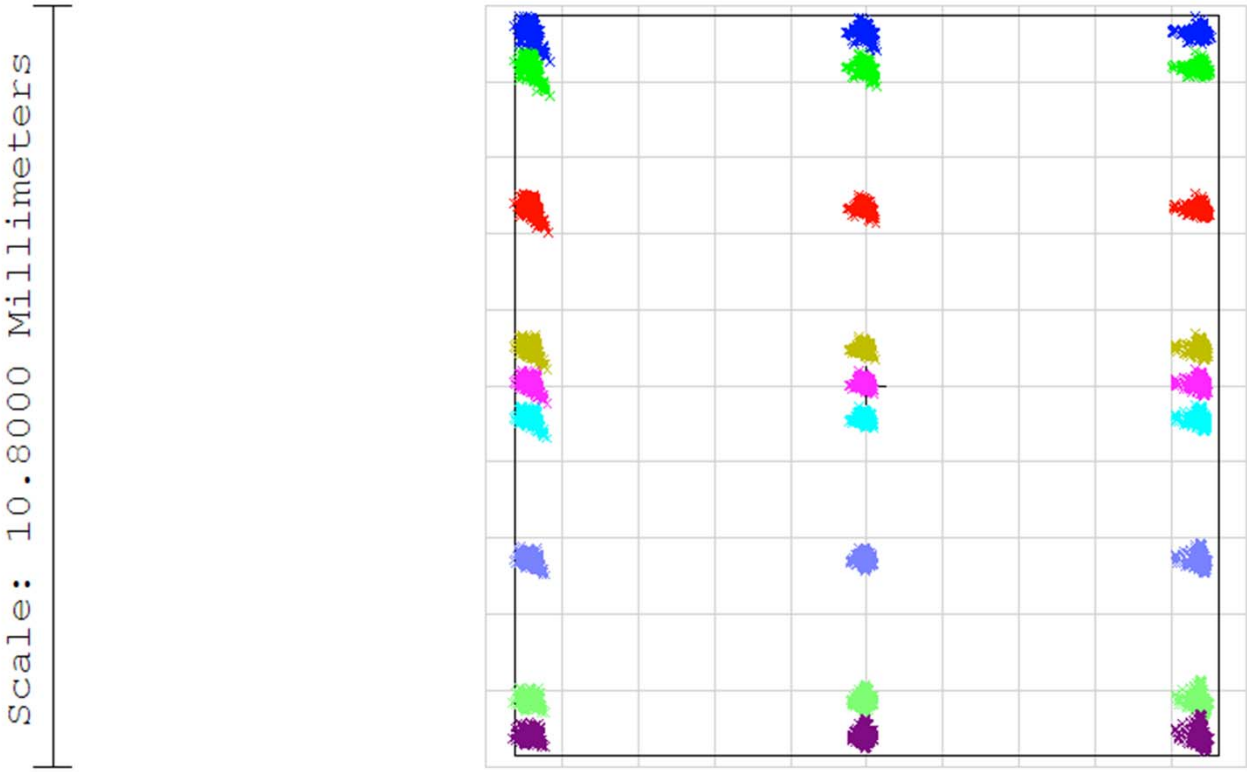

IFu Layout: Slicer with Relay Mirrors

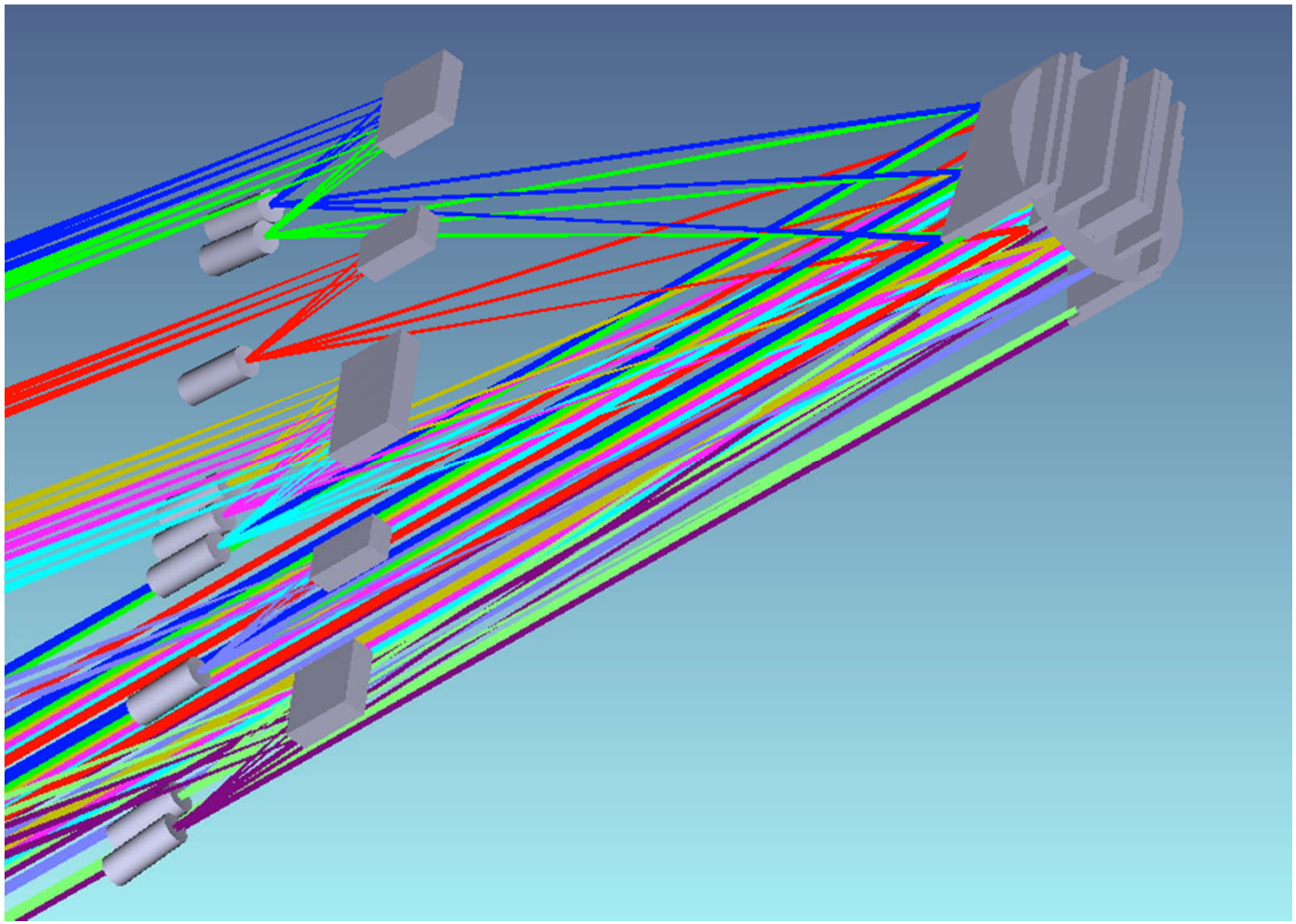

Roughly 50mm cube scale here – all of this will be Zerodur on a Zerodur baseplate

IFU Layout: Slicer & Spectrograph

{packaging not yet finalized}

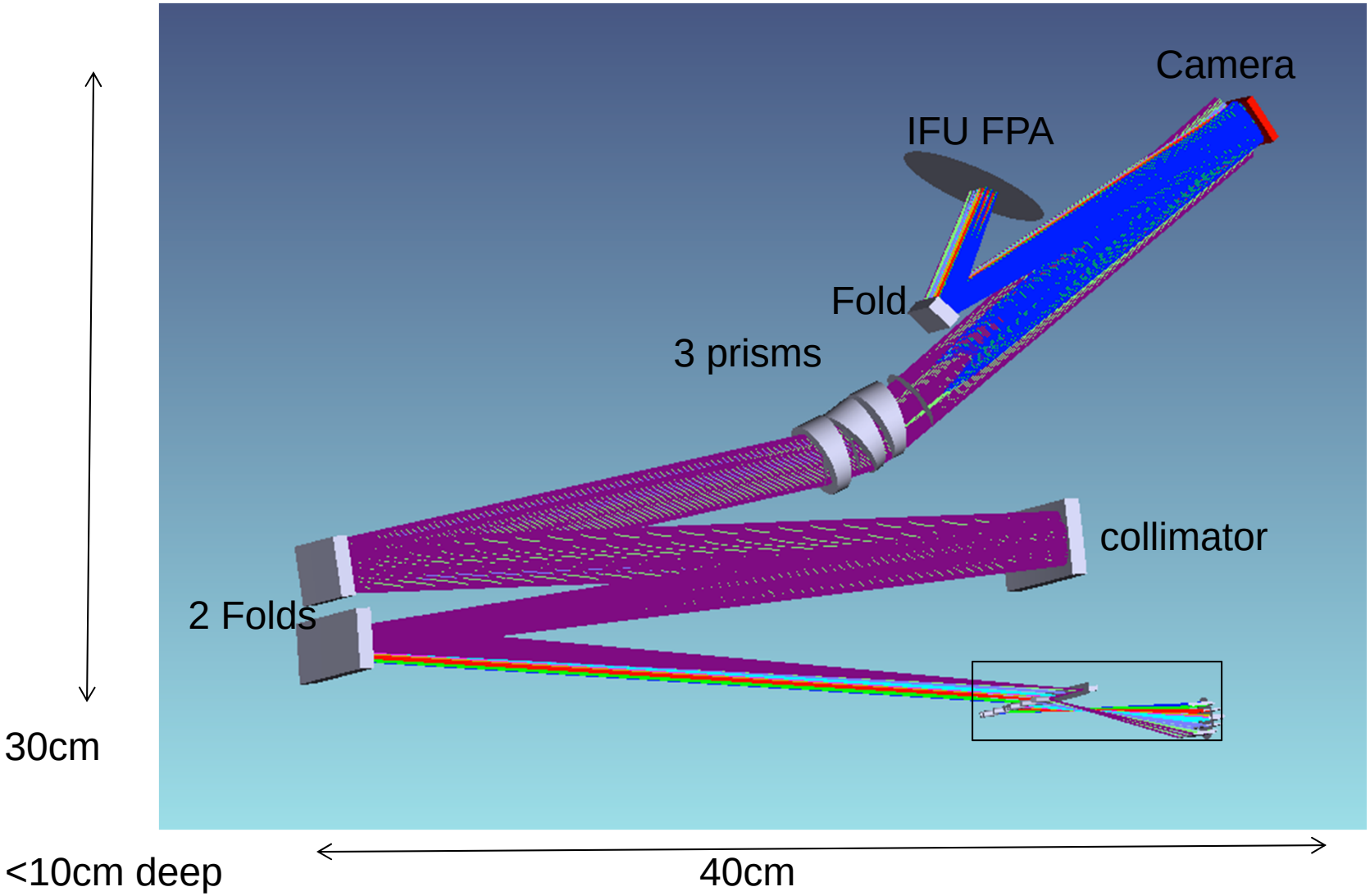

Final Image Plane: 21 slices dispersed

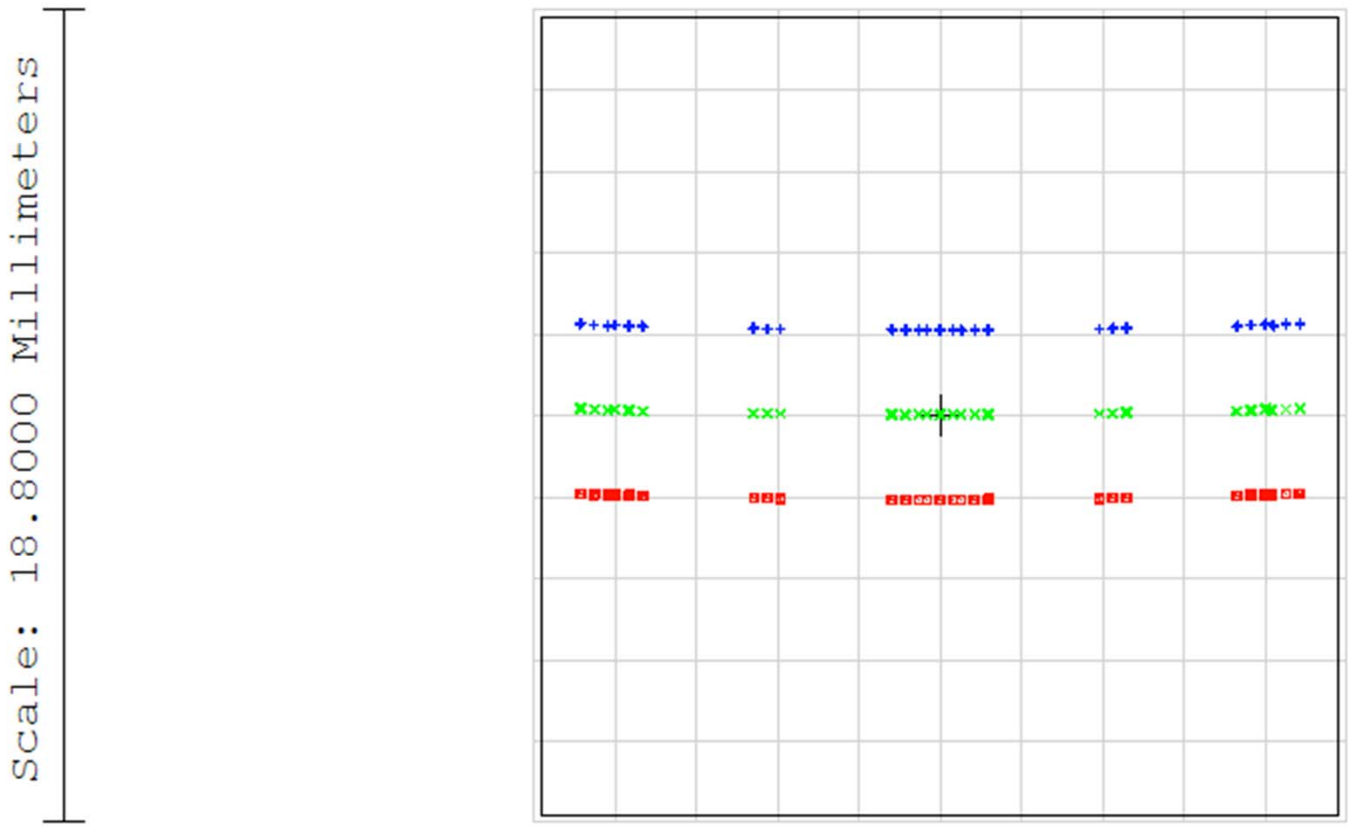

Final Images near diffraction limited

{final design is better than this, update to come}

IFU status and plan forward

- Optical design complete
- Preliminary packaging stages nearly complete
- Mechanical engineering just starting
- Thermal design concept
  - Place FPA (w/ radiation enclosure) near instrument radiator
  - Dedicated small IFU radiator (~0.1m^2) placed with view towards telescope boresight
    - IFU FOV is toward ecliptic pole
    - Idea is to 'point' IFU radiator close to telescope boresight
- Tolerancing – positioning should be loose, particularly between relay M4 and through slicer to prism (f/291); some tighter angular sensitivities
- Modularity – Relay, Slicer, and Spectrometer can be built and tested largely in parallel, and then integrated at the instrument assembly level